5177

8.0 Parts Lists

8.1 ASSY: 5007-00 06 MODEL 7000 - SAO2 AND ETCO2 MONITOR

LINE	PART NO	REV	QPA	DESCRIPTION
0001	1003-32	02	1	SERIAL NO. LABEL
0002	1217-32	02	1	REPAIR LABEL
0003	4470-32	00	1	LABEL, CAUTION GROUNDING
0004	4509-32	00	1	WARRANTY LABEL
0005	4977-13	02	1	TOP COVER SCREENED, MODELS 7000
0006	5007-01	06	1	MAIN ASSY, METAL BOX, MODEL 7000
0007	286214		0	SCREW #6-32*3/8 LG. OVAL PHILLIPS HD. NICLE
0008	600026		1	LINE CORD,7 1/2 FT,HOSP GR PLUG & BUS MACHINE
0009	5039-10	00	2	BOARD RETAINER, MODEL 7000
0010	5007-06	XX	0	OPTION LIST, MODEL 7000
0011	5007-09	02	0	OVERALL WIRING DIAGRAM, METAL BOX, MODEL 7000
0012	5125-32	00	1	LABEL, FUSE RATING, 95VA, 2A SLO-BLO
0013	5007-23	XX	1	OPERATORS MANUAL, MODEL 7000
0014	5007-90	XX	1	SERVICE MANUAL, MODEL 7000
0015	5007-04	XX	0	TEST PROCEDURE, PREBURN, MODEL 7000

8.2 ASSY: 5007-01 06 MAIN ASSY, METAL BOX, MODEL 7000

LINE	PART NO	REV	QPA	DESCRIPTION
0001	2400-01	06	1	MOTHER BOARD ASSY, MODEL 7000
0002	240006		2	RUBBER BUMPER W STEEL WASHER INSERTS
0003	240045		2	FOOT WITH TIP-UP
0005	2401-01	03	1	POWER SUPPLY BOARD ASSY, MODEL 7000
0006	2402-01	04	1	CPU MEMORY BOARD ASSY, MODEL 7000
0007	2403-01	04	1	MAIN CPU BOARD ASSY, MODEL 7000
0008	2404-01	04	1	VIDEO CONTROLLER BD ASSY, MODEL 7000
0013	281500		0	4-40 HEXNUT MACHINE SCREW-STEEL CADMIUM
0014	281501		0	6-32 HEXNUT MACHINE SCREW-STEEL CADMIUM
0015	281507		0	8-32 HEXNUT, 1/8 THICK STEEL CAD PLATE
0016	284200		0	#4-40 X 1/4 SLOTTED BINDING HEAD
0018	285000		0	#4 WASHER, INTERN TOOTH LOCK WASHER
0019	285001		0	#6 INTERNAL TOOTH LOCK WASHER, STEEL CAD
0020	285002		0	#8 INTERNAL TOOTH LOCK WASHER, STEEL CAD
0021	286200		0	6-32 X 1/2 SLOTTED BIND HEAD STEEL CAD
0022	286206		0	6-32 X 1/4 S.B.H. CAD PLATED
0023	286214		0	SCREW #6-32*3/8 LG. OVAL PHILLIPS HD. NICLE
0024	286215		0	SCREW, 6-32 X 3/8 S.B.H.
0025	288200		0	8-32 X 3/8 SLOTTED BIND HEAD STEEL CAD PLATE
0026	400011		1	BATTERY, 12VOLT, 4 AMP HOUR — D USA 1 000214
0027	4338-10	02	1	HANDLE BRACKET, FRONT
0028	4339-10	03	1	HANDLE BRACKET, REAR
0029	5041-13	02	1	BOTTOM COVER PAINTED, MODEL 7000
0030	5055-01	04	1	REAR PANEL ASSY, MODEL 7000
0031	5058-10	02	1	BATTERY BRACKET, MODEL 7000
0032	5088-01	06	1	BEZEL ASSY, MODEL 7000
0033	4986-10	00	1	BRACKET, SPEAKER HOLD DOWN, MODEL 7000
0034	4990-01	01	1	CARD GUIDE BRACKET ASSY, 3 BOARDS, MODEL 7000
0035	5042-01	00	2	CARD GUIDE BRACKET ASSEMBLY, 1 BOARD
0036	5003-01	01	1	CARD GUIDE BRACKET ASSY, 6 BOARDS, MODEL 7000

0037	5006-01	03	1	POWER HARNESS ASSY, MODEL 7000
0038	5014-01	01	1	HANDLE ASSY, MODEL 7000
0039	5031-07	49	1	PROGRAM SET, VIDEO CONTROLLER, MODEL 7000
0040	5068-07	55	1	PROGRAM SET, CPU MEMORY, MODEL 7000
0041	570007		1	CRT, 7 IN. DISPLAY, 12VDC
0043	216008		0	#8 LOCKING TOOTH GROUND LUG SOLDER TYPE
0044	608001		0	CABLE TIE, .094 X 3.62L, SELF-LKG
0045	608002		1	TY-MOUNT. ADHESIVE, 3/4" X 3/4"
0046	285005		0	#8 FLT WASH, ST CAD
0047	9574-01	02	1	FRONT END DIGITAL BD ASSY, MODEL 7000
0048	608098		0	CABLE TIE BASE, ADHESIVE
0049	608097		0	CABLE TIE, BEADED, RELEASABLE, NAT COLOR, 4"
0050	5124-07	56	1	PROGRAM, 02 SATURATION, MODEL 7000
0051	5177-01	02	1	CO2 FRONT END BOARD ASSEMBLY, MODEL 7000
0052	5291-32	00	1	LABEL, SAO2 PATENT, MODEL 7000
0053	5007-04	XX	0	TEST PROCEDURE, PREBURN, MODEL 7000

8.3 ASSY: 4977-13 02 TOP COVER SCREENED, MODEL 7000

LINE	PART NO	REV	QPA	DESCRIPTION
0001	4920-02	00	0	ARTWORK, TOP COVER SCREENING
0002	4977-10	00	1	TOP COVER FAB, MODEL 7000

8.4 ASSY: 2400-01 06 MOTHER BOARD ASSY, MODEL 7000

LINE	PART NO	REV	QPA	DESCRIPTION
0001	2400-02	03	1	FAB, MOTHER BOARD, MODEL 7000
0002	2400-03	06	0	SCHEMATIC, MOTHER BOARD, MODEL 7000
0003	153022		1	CAPACITOR, 1UF, 50V, .20 SP, MULTILYR CERAMIC
0004	154021		2	CAPACITOR 10000UF 35V -10% + 30%
0005	210066		1	CONNECTOR, 72 PIN, HEADER, STRAIGHT
0006	210070		2	CONNECTOR, 96 PIN, RECEPTACLE, PC MOUNT
0007	210072		7	CONNECTOR, 64 PIN, RECEPTACLE, PC MOUNT
0008	211214		1	CONN, 2 PIN, HEADER, FRICTION LOCK
0009	211309		1	CONNECTOR, 3 PIN, PLUG, PC MNT, .062 BD
0010	211625		1	CONNECTOR, 6 PIN, POST HEADER, PC MOUNT
0011	212114		1	CONNECTOR, 10 PIN, CARD EDGE RECEPTACLE
0012	216029		0	TEST TERMINAL
0013	472004		1	RESISTOR, 221 OHM, 1/4W, 1%, CARBON
0014	472015		1	RESISTOR, 2K OHM, 1/4W, 1%, CARBON
0015	475005		1	POT, CERMET 1K OHM, (TOP)
0016	481520		1	DIODE, 1N5820, SCHOTTKY
0017	481532		1	DIODE, KBU6, SINGLE PHASE BRIDGE RECTIFIER
0018	281502		0	3-48 HEXNUT MACHINE SCREW-STEEL CADMIUM
0019	281302		0	SCREW, 3-48 X 5/16L, SLTD PAN HD
0020	285006		0	LOCK WASHER, STEEL CAD., #3 WASHER
0021	212205		1	CONNECTOR, 14 PIN, RIGHT ANGLE POST
0022	210091		1	CONNECTOR, 38 PIN, RIGHT ANGLE POST
0023	152065		1	CAPACITOR, 10UF, 25V, TANTALUM
0026	152004		1	CAPACITOR 100UF 25V 10% ELECT. TYPE TE1211
0027	515026		1	FUSE FAST-BLO, 3 AMP, 3AG,250V
0028	515507		2	FUSE CLIP (DUAL)
0029	5232-01	00	2	GROUND WIRE ASSY, MODEL 7000 MOTHER BD
0030	284201		0	#4-40 X 5/16 SLOTTED BINDING HEAD STEEL CAD.
0031	281500		0	4-40 HEXNUT MACHINE SCREW-STEEL CADMIUM
0032	285009		0	#4 WASHER FLAT STL CAD

8.5 ASSY: 2402-01 04 CPU MEMORY BOARD ASSY, MODEL 7000

LINE	PART NO	REV	QPA	DESCRIPTION
0001	2402-02	03	1	FAB, CPU MEMORY BOARD, MODEL 7000
0002	2402-03	04	0	SCHEMATIC, CPU MEMORY BOARD, MODEL 7000
0003	150002		1	CAPACITOR 100PF 5% 500V DIPPED MICA
0004	153003		1	CAPACITOR, .01UF,50V, 0.1 PITCH, X7R
0005	154016		16	CAPACITOR, .1UF, 50V, .100 SP
0006	210073		2	CONNECTOR, 64 PIN, PLUG, RIGHT ANGLE, PC MTG
0007	215050		4	SOCKET, 28 PIN, STACKED DIP
0012	470036		1	RESISTOR, 1K OHM, 1/4W, 10%, CARBON
0013	472026		3	RESISTOR, 6.81K OHM, 1/4W, 1%, CARBON
0014	472030		4	RESISTOR, 10K OHM, 1/4W, 1%, CARBON
0015	472041		6	RESISTOR, 20K OHM, 1/4W, 1%, CARBON
0016	472053		1	RESISTOR, 64.9K OHM, 1/4W, 1%, CARBON
0017	472060		1	RESISTOR, 121K OHM, 1/4W, 1%, CARBON
0018	472144		3	RESISTOR, 56.2K OHM, 1/4W, 1%
0019	472145		3	RESISTOR, 27.4K OHM, 1/4W, 1%
0020	472205		1	RESISTOR, 1.21K OHM, 1/4W, 1%
0021	475012		3	POT, CERMET 20K OHM, (SIDE)
0022	486224		1	IC,DG212CJ QUAD SPST CMOS ANALOG SW
0023	486236		1	IC, 74HCT173, QUAD D-TYPE FLIP-FLOP
0024	486246		1	IC, MP7574 8-BIT ANALOG/DIGITAL CONVERTER
0025	486712		1	TLO74CN QUAD F FET LOW OFF SET OP AMP
0026	486747		1	IC, AD584JH, PROGRAMMABLE PRECISION VOLTAGE R
0027	472075		2	RESISTOR, 1M OHM, 1/4W, 1%, CARBON
0029	215018		4	IC SOCKET 28 PIN
0030	486247		8	IC, CDM62256E12, 8 BIT HIGH SPEED STATIC RAM
0031	2402-04	XX	0	TEST PROCEDURE, CPU MEMORY BOARD, MODEL 7000

8.6 ASSY: 2403-01 04 MAIN CPU BOARD ASSY, MODEL 7000

LINE	PART NO	REV	QPA	DESCRIPTION
0001	2403-02	03	1	FAB, MAIN CPU BOARD, MODEL 7000
0002	2403-03	04	0	SCHEMATIC, MAIN CPU BOARD, MODEL 7000
0003	152033		3	CAP. DIPPED TANT. 10UF 25V RADIAL LEADS
0006	152039		1	CAPACITOR, 100UF, 10V, TANT.
0007	154016		29	CAPACITOR, .1UF, 50V, .100 SP
0008	150002		2	CAPACITOR 100PF 5% 500V DIPPED MICA
0009	210073		2	CONNECTOR, 64 PIN, PLUG, RIGHT ANGLE, PC MTG
0010	215048		1	CARRIER SOCKET, LEADLESS CHIP, 68 PINS
0011	215049		2	CARRIER SOCKET, LEADLESS CHIP, 44 PINS
0012	215054		1	SOCKET, 52 PIN, PICC, HIGH PRESSURE TIN
0013	230010		1	CRYSTAL, 3.6864MHZ, HC-18/U STYLE HOLDER
0017	470060		2	RESISTOR, 100K OHM, 1/4W, 10%, CARBON
0018	472000		2	RESISTOR, 10 OHM, 1/4W, 1%, CARBON
0019	472008		5	RESISTOR, 499 OHM, 1/4W, 1%, CARBON
0020	472017		6	RESISTOR, 3.32K OHM, 1/4W, 1%, CARBON
0021	472030		2	RESISTOR, 10K OHM, 1/4W, 1%, CARBON
0022	472023		1	RESISTOR, 5.11K OHM, 1/4W, 1%, CARBON
0023	472072		1	RESISTOR, 475K OHM, 1/4W, 1%, CARBON
0024	474017		3	RESISTOR PACK, 10K OHM
0025	481501		3	DIODE, 1N4148, SILICON, GENERAL PURPOSE
0026	483002		1	2N3906 PNP SILICON SWITCHING & AMPLIFIER
0027	484010		1	NPN TRANSISTOR 2N3904

0028	484055		1	TRANSISTOR ARRAY, CA3046E, NPN, DIP
0029	486210		2	IC, MAX233, RS-232 DRIVER/RECEIVER
0030	486211		1	IC, AD7226KN, QUAD 8 BIT D/A CONVERTER
0031	486214		1	IC, MX055GA-2C-16, 16 MHZ HYBRID CLOCK
0032	486215		1	IC, MK68230Q-8, PARALLEL INTERFACE TIMER
0033	486216		2	IC, R68C552J3, DUAL ASYNCHRONOUS COMM
0034	486218		1	IC, MK48T02B-15, 2KX8 ZEROPOWER/TIMEKEEPER
0035	486220		1	IC, HD68HC000CP-8, MICROPROCESSOR
0036	486221		1	IC,74F139 DUAL 1-OF-4 DECODER/DEMULTIPLEXER
0037	486222		1	IC,74F138 1-OF-8 DECODER/DEMULTIPLEXER
0038	486223		4	IC,74F32 QUAD TWO-INPUT OR GATE
0039	486225		1	IC,74F244 OCTAL BUFFER
0040	486227		2	IC,74F08 QUAD TWO-INPUT AND GATE
0041	486229		1	IC,74F04 HEX INVERTER
0042	486230		1	IC,74F74 DUAL D-TYPE FLIP-FLOP
0043	486231		1	IC,74F00 QUAD TWO-INPUT NAND GATE
0044	486232		2	IC,74F161A 4-BIT BINARY COUNTER
0045	486233		1	IC,74HCT221 MONOSTABLE MULTIVIBRATOR
0046	486234		1	IC,74F10 TRIPLE THREE-INPUT NAND GATES
0047	486235		1	IC,74F374 OCTAL D FLIP-FLOP
0048	486271		1	IC, 74F173, QUAD D-TYPE FLIP FLOP, 3 STATE
0049	486254		1	IC, 74F148, 8 TO 3, PRIORITY ENCODER
0050	486255		1	IC, SN76496N, TONE GENERATOR
0051	486469		1	I.C.,.74LS154 4 TO 6 DECOD/DEMUX
0053	514011		1	SWITCH, BD04, 4 POSITION, DIP
0055	486750		1	IC, DUAL OP AMP, CMOS, TLC272CP
0056	150009		1	CAPACITOR 68PF 5% 500V DIPPED MICA
0057	472065		1	RESISTOR, 200K OHM, 1/4W, 1%, CARBON
0058	470045		4	RESISTOR, 5.6K OHM, 1/4W, 10%, CARBON
0060	472001		1	RESISTOR, 49.9 OHM, 1/4W, 1%, CARBON
0061	472058		1	RESISTOR, 100K OHM, 1/4W, 1%, CARBON
0062	472043		1	RESISTOR, 24.9K OHM, 1/4W, 1%, CARBON
0063	2403-04	XX	0	TEST PROCEDURE, MAIN CPU BOARD, MODEL 7000

8.7 ASSY: 2404-01 04 VIDEO CONTROLLER BD ASSY, MODEL 7000

LINE	PART NO	REV	QPA	DESCRIPTION
0001	2404-02	00	1	FAB, VIDEO CONTROLLER BD, MODEL 7000
0002	2404-03	04	0	SCHEMATIC, VIDEO CONTROLLER BD, MODEL 7000
0003	154016		34	CAPACITOR, .1UF, 50V, .100 SP
0004	210073		2	CONNECTOR, 64 PIN, PLUG, RIGHT ANGLE, PC MTG
0005	215018		2	IC SOCKET 28 PIN
0006	215048		1	CARRIER SOCKET, LEADLESS CHIP, 68 PINS
0007	215050		2	SOCKET, 28 PIN, STACKED DIP
0009	472030		1	RESISTOR, 10K OHM, 1/4W, 1%, CARBON
0014	486212		1	IC, HD63484-CP8, ADVANCED CRT CONTROLLER
0015	486213		1	IC, MXO55GA-2C-20, 20 MHZ HYBRID CLOCK
0016	486222		1	IC,74F138 1-OF-8 DECODER/DEMULTIPLEXER
0017	486223		2	IC,74F32 QUAD TWO-INPUT OR GATE
0018	486227		2	IC,74F08 QUAD TWO-INPUT AND GATE
0019	486229		3	IC,74F04 HEX INVERTER
0020	486230		1	IC,74F74 DUAL D-TYPE FLIP-FLOP
0021	486231		2	IC,74F00 QUAD TWO-INPUT NAND GATE
0022	486234		2	IC,74F10 TRIPLE THREE-INPUT NAND GATES
0023	486235		2	IC,74F374 OCTAL D FLIP-FLOP

0024	486237		2	IC,74F373 OCTAL TRANPARENT LATCH
0025	486238		1	IC, 74F163A 4-BIT BINARY COUNTER
0026	486239		1	IC, 74F11 TRIPLE THREE- INPUT AND GATES
0027	486240		1	IC, 74F27 TRIPLE THREE-INPUT NOR GATE
0028	486241		4	IC,74F166 8-BIT SER/PRL-IN, SER OUT SHIFT REG
0029	486242		2	IC,74F164 8-BIT SERIAL-IN PARALLEL-OUT SHIFT
0030	486243		2	IC,74F151 8-INPUT MULTIPLEXER
0031	486244		1	IC,74F273 OCTAL D FLIP FLOP
0032	486247		6	IC, CDM62256E12, 8 BIT HIGH SPEED STATIC RAM
0033	2404-04	XX	0	TEST PROCEDURE, VIDEO CONTROLLER BOARD

8.8 ASSY: 2405-01 05 RAM SIMM BOARD ASSY, MODEL 7000

LINE	PART NO	REV	QPA	DESCRIPTION
0001	2405-02	03	1	FAB, RAM SIMM BOARD, MODEL 7000
0002	2405-03	05	0	SCHEMATIC, RAM SIMM BOARD, MODEL 7000
0003	153048		1	CAPACITOR, .1UF, 50V, 20%, SURFACE MOUNT
0004	486209		4	IC, SRM20256LM/12, CMOS 256K STATIC RAM
0004	486217		0	IC, HM62256LFP-15T, 8 BIT HIGH SP STATIC CMOS

8.9 ASSY: 2407-01 03 FRONT END BD ASSEMBLY (CTC), MODEL 7000

LINE	PART NO	REV	QPA	DESCRIPTION
0001	2407-02	03	1	FAB, FRONT END BOARD (CTC), MODEL 7000
0002	2407-03	03	0	SCHEMATIC, FRONT END BD (CTC), MODEL 7000
0003	5012-07	23	1	PROGRAM, EPROM ASSY, (CTC), MODEL 7000
0004	152033		3	CAP. DIPPED TANT. 10UF 25V RADIAL LEADS
0005	152059		3	CAPACITOR, 22UF, 25V, TANTALUM
0006	153022		1	CAPACITOR, 1UF, 50V, .200 SP
0007	153040		2	CAPACITOR, 15PF, 100V, .100 SP
0008	154016		17	CAPACITOR, .1UF, 50V, .100 SP
0009	154043		1	CAPACITOR, 2200PF, 33V, 2%, POLYPROPELENE
0010	154045		1	CAPACITOR, 560PF, 33V, 2%, POLYPROPELENE
0011	154046		1	CAPACITOR, 3900PF, 33V, 2%, POLYPROPELENE
0012	210071		1	CONNECTOR, 96 PIN, PLUG, RIGHT ANGLE
0013	212656		1	CONNECTOR, 25 PIN, .025 SQUARE TERMINAL STRIP
0014	215002		2	IC SOCKET 24 PIN
0015	215004		1	IC SOCKET 40 PIN
0016	215018		2	IC SOCKET 28 PIN
0017	215031		2	IC SOCKET, 20 PIN
0018	216029		0	TEST TERMINAL
0019	230012		1	CRYSTAL, VF246, 2.4576MHZ, .2 SPACING
0020	281502		0	3-48 HEXNUT MACHINE SCREW-STEEL CADMIUM
0021	281303		0	SCREW, 3-48 X 7/16L, SLTD PAN HD
0022	285006		0	LOCK WASHER, STEEL CAD., #3 WASHER
0023	470024		1	RESISTOR, 100 OHM, 1/4W, 10%, CARBON
0024	470038		1	RESISTOR, 1.5K OHM, 1/4W, 10%, CARBON
0025	470052		4	RESISTOR, 22K OHM, 1/4W, 10%, CARBON
0026	472011		1	RESISTOR, 1K OHM, 1/4W, 1%, CARBON
0027	472017		2	RESISTOR, 3.32K OHM, 1/4W, 1%, CARBON
0028	472018		2	RESISTOR, 4.02K, OHM, 1/4W, 1%, CARBON
0029	472025		2	RESISTOR, 6.04K OHM, 1/4W, 1%, CARBON
0030	472028		2	RESISTOR, 8.06K OHM, 1/4W, 1%, CARBON
0031	472030		4	RESISTOR, 10K OHM, 1/4W, 1%, CARBON
0032	472031		2	RESISTOR, 10.7K OHM, 1/4W, 1%, CARBON
0033	472033		2	RESISTOR, 11.5K OHM, 1/4W, 1%, CARBON

0034	472034		2	RESISTOR, 12.1K OHM, 1/4W, 1%, CARBON
0035	472058		1	RESISTOR, 100K OHM, 1/4W, 1%, CARBON
0036	472144		1	RESISTOR, 56.2K OHM, 1/4W, 1%
0037	472228		2	RESISTOR, 1.96K OHM, 1/4W, 1%, CARBON
0038	472237		2	RESISTOR, 2.61K OHM, 1/4W, 1%, CARBON
0039	472238		2	RESISTOR, 4.64K OHM, 1/4W, 1%, CARBON
0040	472239		2	RESISTOR, 5.36K OHM, 1/4W, 1%, CARBON
0041	472240		2	RESISTOR, 6.65K OHM, 1/4W, 1%, CARBON
0042	472241		2	RESISTOR, 7.32K OHM, 1/4W, 1%, CARBON
0043	472242		2	RESISTOR, 8.87K OHM, 1/4W, 1%, CARBON
0044	472243		2	RESISTOR, 9.31K OHM, 1/4W, 1%, CARBON
0045	481501		2	DIODE, 1N4148, SILICON, GENERAL PURPOSE
0046	481511		1	DIODE, 1N270, GERMANIUM
0047	481522		1	DIODE, 1N4001, RECTIFIER, SILICON
0048	482557		1	LED, MV54B, RED
0049	484502		1	LM320LZ-5 NEG VOLTAGE REGULATOR 5V PLASTIC
0050	485518		1	TRANSISTOR, IRF523, N-CHANNEL, F.E.T
0051	486253		1	IC, HD637B01VOP, MICROCOMPUTER
0052	486257		2	IC, 74HC273N, OCTAL D TYPE FLIP FLOP
0053	486258		2	IC, CD4067, CMOS ANALOG MULTIPLEXER/DEMULT
0054	486261		1	IC, MC14053, ANALOG MULTIPLEXER/DEMULTIPLEXER
0055	486263		1	IC, AD7582KN, SUCCESSIVE APPROXIMATION ADC
0056	486625		1	MC74HC32N I.C. QUAD 2 INPUT OR GATE
0057	486651		1	MM74HC138 I.C. 3 TO 8 LINE DECODER
0058	486656		1	MM74HCOON I.C. QUAD 2 INPUT POSITIVE NAND
0059	486744		1	I.C., TLO72 DUAL OP AMP JFET INPUT
0060	486759		1	IC, REF02, +5V PRCN VOLTAGE REF/TEMP TRANS
0061	606401		0	#24 BUSS WIRE
0062	2407-04	XX	0	TEST PROCEDURE, FRONT END BOARD (CTC)

8.10 ASSY: 2409-01 02 PIGGYBACK BD ASSY (CTC), 1260

LINE	PART NO	REV	QPA	DESCRIPTION
0001	2409-02	00	1	FAB, PIGGYBACK BOARD (CTC), MODEL 7000
0002	2409-03	02	0	SCHEMATIC, PIGGYBACK BD (CTC), 1260
0003	151014		3	CAPACITOR .001UF 1% 50V MYLAR
0004	152018		3	CAPACITOR 6.8UF 35V 10% TANTALYTIC RADIAL
0005	152060		2	CAPACITOR, 22UF, 100V, 10%, ELECTROLYTIC
0006	153018		2	CAPACITOR,470PF,100V.,10%
0007	153022		7	CAPACITOR, 1UF, 50V, .200 SP
0008	153026		2	CAPACITOR, 100PF, 50V, .100 SP
0009	153045		2	CAPACITOR, .47UF, 50V, .200 SP
0010	154016		23	CAPACITOR, .1UF, 50V, .100 SP
0011	154017		1	CAPACITOR, .47UF, 10%, MULTILAYER
0012	154046		2	CAPACITOR, 3900PF, 33V, 2%, POLYPROPELENE
0013	154048		1	CAPACITOR, .1UF, 100V, METALIZED POLYESTER
0014	212655		1	CONNECTOR, 25 PIN, BOTTOM ENTRY
0015	216029		0	TEST TERMINAL
0016	280143		1	HEAT SINK, HORIZ MTG, ALUMINUM ALLOY
0017	281500		0	4-40 HEXNUT MACHINE SCREW-STEEL CADMIUM
0018	284200		0	#4-40 X 1/4 SLOTTED BINDING HEAD STEEL CAD.
0019	285000		0	#4 WASHER, INTERN TOOTH LOCK WASHER
0020	320004		0	HEATSINK COMPOUND
0021	472269		1	RESISTOR, 2 OHM, 1/4W, 1%, METAL FILM
0022	470024		3	RESISTOR, 100 OHM, 1/4W, 10%, CARBON

0023	470036		16	RESISTOR, 1K OHM, 1/4W, 10%, CARBON
0024	470052		1	RESISTOR, 22K OHM, 1/4W, 10%, CARBON
0025	472008		2	RESISTOR, 499 OHM, 1/4W, 1%, CARBON
0026	472011		1	RESISTOR, 1K OHM, 1/4W, 1%, CARBON
0027	472013		1	RESISTOR, 1.5K OHM, 1/4W, 1%, CARBON
0028	472015		2	RESISTOR, 2K OHM, 1/4W, 1%, CARBON
0029	472022		2	RESISTOR, 4.99K OHM, 1/4W, 1%, CARBON
0030	472023		4	RESISTOR, 5.11K OHM, 1/4W, 1%, CARBON
0031	472030		16	RESISTOR, 10K OHM, 1/4W, 1%, CARBON
0032	472041		5	RESISTOR, 20K OHM, 1/4W, 1%, CARBON
0033	472042		1	RESISTOR, 21.5K OHM, 1/4W, 1%, CARBON
0034	472046		1	RESISTOR, 33.2K OHM, 1/4W, 1%, CARBON
0035	472055		2	RESISTOR, 80.6K OHM, 1/4W, 1%, CARBON
0036	472058		2	RESISTOR, 100K OHM, 1/4W, 1%, CARBON
0037	472065		3	RESISTOR, 200K OHM, 1/4W, 1%, CARBON
0038	472075		4	RESISTOR, 1M OHM, 1/4W, 1%, CARBON
0039	472081		1	RESISTOR, 3.01K OHM, 1/4W, 1%, CARBON
0040	472119		2	RESISTOR, 178K OHM, 1/4W, 1%, CARBON
0041	472130		1	RESISTOR, 324K OHM, 1/4W, 1%, CARBON
0042	472131		1	RESISTOR, 3.48K OHM, 1/4W, 1%, CARBON
0043	472137		2	RESISTOR, 562K OHM, 1/4W, 1%
0044	472158		1	RESISTOR, 3.3M OHM, 1/4W, 1%
0045	472166		1	RESISTOR, 39.2K OHM, 1/4W, 1%
0046	472185		2	RESISTOR, 61.9K OHM, 1/4W, 1%
0047	472192		1	RESISTOR, 16.9K OHM, 1/4W, 1%
0048	472224		2	RESISTOR, 28.7K OHM, 1/4W, 1%, METAL FILM
0049	473512		2	RESISTOR, 10K OHM, 1/4W, .1%
0050	473551		2	RESISTOR, 20K OHM, 1/4W, .1%
0052	481024		1	DIODE, 1N4746A, 18V, ZENER
0053	481501		3	DIODE, 1N4148, SILICON, GENERAL PURPOSE
0054	481511		2	DIODE, 1N270, GERMANIUM
0055	481528		3	DIODE, 1N4938, RECTIFIER, 200V, 50A
0056	483015		4	TRANSISTOR, 2N5401, SILICON, PNP
0057	484056		3	TRANSISTOR, 2N5551, SILICON, NPN
0058	485500		3	2N4393 N-CHANNEL JUNCTION F.E.T.
0059	485517		4	TRANSISTOR, VN10KM, N-CHANNEL, F.E.T
0060	485518		1	TRANSISTOR, IRF523, N-CHANNEL, F.E.T
0061	485519		1	TRANSISTOR, J270, P-CHANNEL, F.E.T
0062	485522		1	TRANSISTOR, VP0808M, P-CHANNEL
0063	486259		1	IC, CD4018, CMOS PRESETTABLE DIVIDE BY N
0064	486260		1	IC, CD4017, CMOS DECADE COUNTER/DIVIDER
0065	486651		1	MM74HC138 I.C. 3 TO 8 LINE DECODER
0066	486716		2	LM393N DUAL COMPARATOR
0067	486744		6	I.C., TLO72 DUAL OP AMP JFET INPUT
0068	486758		2	IC, LF398, MONOLITHIC SAMPLE & HOLD CIRCUIT
0069	486760		1	IC, UA759UIC, POWER OPERATIONAL AMPLIFIER
0070	487050		1	IC, 74HCU04, HEX UNBUFFERED INVERTER
0071	4994-10	00	1	TRANSFORMER, PC MOUNT, MODEL 7000
0072	2409-04	XX	0	TEST PROCEDURE, PIGGYBACK BOARD (CTC)

8.11 ASSY: 2418-01 04 PIGGYBACK BOARD ASSEMBLY, MODEL 7000

LINE	PART NO	REV	QPA	DESCRIPTION
0001	2418-02	02	1	ARTWORK, PIGGYBACK BOARD (CTC), MODEL 7000
0002	2418-03	04	0	SCHEMATIC, PIGGYBACK BD, MODEL 7000

0003	151014	3	CAPACITOR .001UF 1% 50V MYLAR
0004	152018	3	CAPACITOR 6.8UF 35V 10% TANTALYTIC RADIAL
0005	152060	2	CAPACITOR, 22UF, 100V, 10%, ELECTROLYTIC
0006	153018	2	CAPACITOR,470PF,100V.,10%
0007	153022	7	CAPACITOR, 1UF, 50V, .200 SP
0008	153026	2	CAPACITOR, 100PF, 50V, .100 SP
0009	153045	2	CAPACITOR, .47UF, 50V, .200 SP
0010	154016	24	CAPACITOR, .1UF, 50V, .100 SP
0011	154017	1	CAPACITOR, .47UF, 10%, MULTILAYER
0012	154046	2	CAPACITOR, 3900PF, 33V, 2%, POLYPROPELENE
0013	154048	1	CAPACITOR, .1UF, 100V, METALIZED POLYESTER
0014	212655	1	CONNECTOR, 25 PIN, BOTTOM ENTRY
0015	216029	0	TEST TERMINAL
0016	280143	1	HEAT SINK, HORIZ MTG, ALUMINUM ALLOY
0017	281500	0	4-40 HEXNUT MACHINE SCREW-STEEL CADMIUM
0018	284200	0	#4-40 X 1/4 SLOTTED BINDING HEAD
0019	285000	0	#4 WASHER, INTERN TOOTH LOCK WASHER
0020	320004	0	HEATSINK COMPOUND
0021	472269	1	RESISTOR, 2 OHM, 1/4W, 1%, METAL FILM
0022	472003	3	RESISTOR, 100 OHM, 1/4W, 1%, CARBON
0023	472043	1	RESISTOR, 24.9K OHM, 1/4W, 1%, CARBON
0024	472170	1	RESISTOR, 22.1K OHM, 1/4W, 1%
0025	472008	2	RESISTOR, 499 OHM, 1/4W, 1%, CARBON
0026	472011	7	RESISTOR, 1K OHM, 1/4W, 1%, CARBON
0027	472013	1	RESISTOR, 1.5K OHM, 1/4W, 1%, CARBON
0028	472015	2	RESISTOR, 2K OHM, 1/4W, 1%, CARBON
0029	472022	2	RESISTOR, 4.99K OHM, 1/4W, 1%, CARBON
0030	472023	4	RESISTOR, 5.11K OHM, 1/4W, 1%, CARBON
0031	472030	17	RESISTOR, 10K OHM, 1/4W, 1%, CARBON
0032	472041	5	RESISTOR, 20K OHM, 1/4W, 1%, CARBON
0033	472042	1	RESISTOR, 21.5K OHM, 1/4W, 1%, CARBON
0034	472046	1	RESISTOR, 33.2K OHM, 1/4W, 1%, CARBON
0035	472055	2	RESISTOR, 80.6K OHM, 1/4W, 1%, CARBON
0036	472058	2	RESISTOR, 100K OHM, 1/4W, 1%, CARBON
0037	472065	3	RESISTOR, 200K OHM, 1/4W, 1%, CARBON
0038	472075	4	RESISTOR, 1M OHM, 1/4W, 1%, CARBON
0039	472081	1	RESISTOR, 3.01K OHM, 1/4W, 1%, CARBON
0040	472119	2	RESISTOR, 178K OHM, 1/4W, 1%, CARBON
0041	472130	1	RESISTOR, 324K OHM, 1/4W, 1%, CARBON
0042	472131	1	RESISTOR, 3.48K OHM, 1/4W, 1%, CARBON
0043	472137	3	RESISTOR, 562K OHM, 1/4W, 1%
0044	472158	1	RESISTOR, 3.3M OHM, 1/4W, 1%
0045	472166	1	RESISTOR, 39.2K OHM, 1/4W, 1%
0046	472185	2	RESISTOR, 61.9K OHM, 1/4W, 1%
0047	472192	1	RESISTOR, 16.9K OHM, 1/4W, 1%
0048	472224	2	RESISTOR, 28.7K OHM, 1/4W, 1%, METAL FILM
0049	473512	2	RESISTOR, 10K OHM, 1/4W, .1%
0050	473551	2	RESISTOR, 20K OHM, 1/4W, .1%
0052	481024	1	DIODE, 1N4746A, 18V, ZENER
0053	481501	4	DIODE, 1N4148, SILICON, GENERAL PURPOSE
0054	481511	2	DIODE, 1N270, GERMANIUM
0055	481528	3	DIODE, 1N4938, RECTIFIER, 200V, 50A
0056	483015	4	TRANSISTOR, 2N5401, SILICON, PNP
0057	484056	3	TRANSISTOR, 2N5551, SILICON, NPN

0058	485500		3	2N4393 N-CHANNEL JUNCTION F.E.T.
0059	485517		4	TRANSISTOR, VN10KM, N-CHANNEL, F.E.T
0060	485518		1	TRANSISTOR, IRF523, N-CHANNEL, F.E.T
0061	485519		1	TRANSISTOR, J270, P-CHANNEL, F.E.T
0062	485522		1	TRANSISTOR, VP0808M, P-CHANNEL
0063	486259		1	IC, CD4018, CMOS PRESETTABLE DIVIDE BY N
0064	486260		1	IC, CD4017, CMOS DECADE COUNTER/DIVIDER
0065	486651		1	MM74HC138 I.C. 3 TO 8 LINE DECODER
0066	486716		2	LM393N DUAL COMPARATOR
0067	486744		6	I.C., TLO72 DUAL OP AMP JFET INPUT
0068	486758		2	IC, LF398, MONOLITHIC SAMPLE & HOLD CIRCUIT
0069	486760		1	IC, UA759UIC, POWER OPERATIONAL AMPLIFIER
0070	486675		1	MM74HC14N, IC,CMOS
0071	4994-10	00	1	TRANSFORMER, PC MOUNT, MODEL 7000
0072	486767		1	IC, MAX8211, PROGRAMMMABLE VOLTAGE DETECTOR
0073	606401		0	#24 BUSS WIRE
0074	152033		1	CAP. DIPPED TANT. 10UF 25V RADIAL LEADS
0075	2418-04	XX	0	TEST PROCEDURE, PIGGYBACK BOARD, MODEL 7000

8.12 ASSY: 2421-01 01 FRONT END BOARD ASSY, MODEL 7000

LINE	PART NO	REV	QPA	DESCRIPTION
0001	2421-02	00	1	FAB, FRONT END BOARD, MODEL 7000
0002	2421-03	00	0	SCHEMATIC, FRONT END BOARD, MODEL 7000
0003	5012-07	23	1	PROGRAM, EPROM ASSY, (CTC), MODEL 7000
0004	152033		3	CAP. DIPPED TANT. 10UF 25V RADIAL LEADS
0005	152059		3	CAPACITOR, 22UF, 25V, TANTALUM
0006	153022		1	CAPACITOR, 1UF, 50V, .200 SP
0007	153040		2	CAPACITOR, 15PF, 100V, .100 SP
0008	154016		17	CAPACITOR, .1UF, 50V, .100 SP
0009	154043		1	CAPACITOR, 2200PF, 33V, 2%
0010	154045		1	CAPACITOR, 560PF, 33V, 2%
0011	154046		1	CAPACITOR, 3900PF, 33V, 2%
0012	210071		1	CONNECTOR, 96 PIN, PLUG, RIGHT ANGLE
0013	212656		1	CONNECTOR, 25 PIN, .025 SQUARE TERMINAL STRIP
0015	215004		1	IC SOCKET 40 PIN
0016	215018		1	IC SOCKET 28 PIN
0018	216029		0	TEST TERMINAL
0019	230012		1	CRYSTAL, VF246, 2.4576MHZ, .2 SPACING
0023	470024		1	RESISTOR, 100 OHM, 1/4W, 10%, CARBON
0024	470038		1	RESISTOR, 1.5K OHM, 1/4W, 10%, CARBON
0025	470052		4	RESISTOR, 22K OHM, 1/4W, 10%, CARBON
0026	472011		1	RESISTOR, 1K OHM, 1/4W, 1%, CARBON
0027	472017		2	RESISTOR, 3.32K OHM, 1/4W, 1%, CARBON
0028	472018		2	RESISTOR, 4.02K, OHM, 1/4W, 1%, CARBON
0029	472025		2	RESISTOR, 6.04K OHM, 1/4W, 1%, CARBON
0030	472028		2	RESISTOR, 8.06K OHM, 1/4W, 1%, CARBON
0031	472030		5	RESISTOR, 10K OHM, 1/4W, 1%, CARBON
0032	472031		2	RESISTOR, 10.7K OHM, 1/4W, 1%, CARBON
0033	472033		2	RESISTOR, 11.5K OHM, 1/4W, 1%, CARBON
0034	472034		2	RESISTOR, 12.1K OHM, 1/4W, 1%, CARBON
0035	472058		1	RESISTOR, 100K OHM, 1/4W, 1%, CARBON
0036	472144		1	RESISTOR, 56.2K OHM, 1/4W, 1%
0037	472228		2	RESISTOR, 1.96K OHM, 1/4W, 1%, CARBON
0038	472237		2	RESISTOR, 2.61K OHM, 1/4W, 1%, CARBON

0039	472238		2	RESISTOR, 4.64K OHM, 1/4W, 1%, CARBON
0040	472239		2	RESISTOR, 5.36K OHM, 1/4W, 1%, CARBON
0041	472240		2	RESISTOR, 6.65K OHM, 1/4W, 1%, CARBON
0042	472241		2	RESISTOR, 7.32K OHM, 1/4W, 1%, CARBON
0043	472242		2	RESISTOR, 8.87K OHM, 1/4W, 1%, CARBON
0044	472243		2	RESISTOR, 9.31K OHM, 1/4W, 1%, CARBON
0045	481501		2	DIODE, 1N4148, SILICON, GENERAL PURPOSE
0046	481511		1	DIODE, 1N270, GERMANIUM
0047	481522		1	DIODE, 1N4001, RECTIFIER, SILICON
0048	482557		1	LED, MV54B, RED
0049	484502		1	LM320LZ-5 NEG VOLTAGE REGULATOR 5V PLASTIC
0050	485518		2	TRANSISTOR, IRF523, N-CHANNEL, F.E.T
0051	486253		1	IC, HD637B01VOP, MICROCOMPUTER
0052	486257		2	IC, 74HC273N, OCTAL D TYPE FLIP FLOP
0053	486258		2	IC, CD4067, CMOS ANALOG MULTIPLEXER/DEMULT
0054	486261		1	IC, MC14053, ANALOG MULTIPLEXER/DEMULTIPLEXER
0055	486263		1	IC, AD7582KN, SUCCESSIVE APPROXIMATION ADC
0056	486625		1	MC74HC32N I.C. QUAD 2 INPUT OR GATE
0057	486651		1	MM74HC138 I.C. 3 TO 8 LINE DECODER
0058	486656		1	MM74HCOON I.C. QUAD 2 INPUT POSITIVE NAND
0059	486744		2	I.C., TLO72 DUAL OP AMP JFET INPUT
0060	486759		1	IC, REF02, +5V PRCN VOLTAGE REF/TEMP TRANS
0061	284201		0	#4-40 X 5/16 SLOTTED BINDING HEAD STEEL CAD.
0062	285000		0	#4 WASHER, INTERN TOOTH LOCK WASHER
0063	281500		0	4-40 HEXNUT MACHINE SCREW-STEEL CADMIUM
0064	472075		1	RESISTOR, 1M OHM, 1/4W, 1%, CARBON
0065	472042		1	RESISTOR, 21.5K OHM, 1/4W, 1%, CARBON
0066	472194		1	RESISTOR, 31.6K OHM, 1/4W, 1%, CARBON
0067	470056		1	RESISTOR, 47K OHM, 1/4W, 10%, CARBON
0068	484010		1	NPN TRANSISTOR 2N3904
0069	161039		0	FOAM TAPE, 1/32THK X 2 1/2WIDE X 216FT DBL SD
0070	280155		0	SPACER, .187(4.7), LOCKING, .062(1.6) BD, NYL
0071	2421-04	XX	0	TEST PROCEDURE, FRONT END BOARD, MODEL 7000

8.13 ASSY: 5006-01 03 POWER HARNESS ASSY, MODEL 7000

LINE	PART NO	REV	QPA	DESCRIPTION
0001	4985-10	02	1	TRANSFORMER, MODEL 7000
0002	5017-01	01	1	FAN HARNESS ASSY, MODEL 7000
0003	210049		1	PWR ENTRY MODULE, RFI FLTR, PWR SW, 4 V SEL,
0006	211626		1	CONNECTOR, 6 PIN, RECEPTACLE, 20AWG, LOCKING
0007	216003		0	#6 LOCKING TOOTH GROUND LUG SOLDER TYPE
0008	5021-01	00	1	BATTERY WIRE ASSY, POSITIVE, MODEL 7000
0009	5022-01	00	1	BATTERY WIRE ASSY, NEGATIVE, MODEL 7000
0010	5016-01	00	1	SPEAKER ASSY, MODEL 7000
0013	515009		1	2A SLO-BLO FUSE (FORMERLY 3AG-SB)
0014	605263		0	#18 HOOKUP WIRE,GREEN/YELLOW STRIPE
0015	608001		0	CABLE TIE, .094 X 3.62L, SELF-LKG
0016	608002		1	TY-MOUNT. ADHESIVE, 3/4" X 3/4"
0017	608006		0	TUBING, HEAT SHRINK, 1/2" DIA, BLACK
0018	608011		0	TUBING, HEAT SHRINK, 3/16" DIA, BLACK
0019	608014		0	TUBING, HEAT SHRINK, BLK, .750 ID, .030 WALL

8.14 ASSY: 5055-01 04 REAR PANEL ASSY, MODEL 7000

LINE PART NO REV QPA DESCRIPTION

0001	5013-01	02	1	REGULATOR HARNESS ASSY, MODEL 7000
0002	5033-13	00	1	FAN FILTER SHROUD PAINTED, MODEL 7000
0003	5038-01	01	1	GROUND WIRE ASSY, REAR PANEL, MODEL 7000
0004	5051-10	00	1	FAN FILTER, MODELS 1260, 7000
0005	5055-13	01	1	REAR PANEL SCREENED, MODEL 7000
0006	5061-01	00	1	FAN ASSEMBLY, MODEL 7000
0007	5170-10		1	RIBBON CABLE HARNESS, REAR PANEL, MODEL 7000
0008	215017		1	TO-3 INSULATING WASHER THERMALLY CONDUCTIVE
0009	216012		1	UNINSULATED BINDING POST
0010	260013		1	FAN GUARD (FOR 260012)
0011	280035		1	INSULG COVER FOR TO-3 CASE WITH NYLON SNAP
0012	280146		3	SCREWLOCK, FEMALE, 4-40 X .312L
0013	281500		0	4-40 HEXNUT MACHINE SCREW-STEEL CADMIUM
0014	285000		0	#4 WASHER, INTERN TOOTH LOCK WASHER
0015	285001		0	#6 INTERNAL TOOTH LOCK WASHER, STEEL CAD
0017	286206		0	6-32 X 1/4 S.B.H. CAD PLATED
0018	286218		0	SCREW, 6-32 X 5/8L, PAN HD, SELF TAPPING
0019	286217		0	SCREW, SLTD BINDING HD, 6-32 X 1 1/4 LG, STL
0020	320004		0	HEATSINK COMPOUND
0021	484505		1	LM317K POS VOLTAGE REGULATOR
0022	161001		0	LOCTITE (THREAD LOCKING)
0023	5219-10	00	1	CLAMP, LINECORD, MODEL 7000
0024	286002		0	SCREW, WING, 6-32 X 1/2, ZINC ALLOY

8.15 ASSY: 2267-01 03 SATURATION FRONT END BD ASSY, MODEL 7000

LINE	PART NO	REV	QPA	DESCRIPTION
0001	2267-02	01	1	FAB, FRONT END DIGITAL BOARD, MODEL 7000
0002	2267-03	03	0	SCHEMATIC, FRONT END DIGITAL BOARD, MODEL 700
0003	4378-10	04	1	TRANSFORMER,ISOLATION
0004	152004		2	CAPACITOR 100UF 25V 10% ELECT. TYPE TE1211
0005	152033		4	CAP. DIPPED TANT. 10UF 25V RADIAL LEADS
0006	152050		4	CAPACITOR 1000UF,10V.,-10,+50%
0007	152057		1	CAPACITOR, 100UF, 6.3V, TANTALUM, .2" PITCH
0008	153002		1	CAPACITOR, .001, 50V, 0.1" PITCH X7R
0009	153012		1	CAPACITOR,22PF
0010	153013		1	CAPACITOR, 33PF
0011	153041		2	CAPACITOR, 56PF, 100V, .100 SP
0012	154016		17	CAPACITOR, .1UF, 50V, .100 SP
0013	154027		1	CAPACITOR, .0015UF,160V,1%,.6 PITCH
0014	161038		0	FOAM TAPE,1/2"W X 3/4"L,DOUBLE-SIDED ADHESIVE
0015	180000		1	CHOKE 1 MILLIHENRI, .250 DIA X .500 LG, 10%
0016	180004		1	CHOKE 100UH
0017	210071		1	CONNECTOR, 96 PIN, PLUG, RIGHT ANGLE
0018	210078		1	CONNECTOR, 36 PIN, HEADER, SIL, GOLD CONTACT
0019	213405		1	CONNECTOR, 40 PIN, HEADER, DIL, GOLD CONTACT
0020	215004		1	IC SOCKET 40 PIN
0021	215006		1	IC SOCKET 16 PIN
0023	215018		3	IC SOCKET 28 PIN
0026	230007		1	CRYSTAL, 8MHZ
0027	230012		1	CRYSTAL, VF246, 2.4576MHZ, .2 SPACING
0028	470008		2	RESISTOR, 4.7 OHM, 1/4W, 10%, CARBON
0029	470084		1	RESISTOR, 10M OHM, 1/4W, 10%, CARBON
0030	471400		1	RESISTOR, 100M OHM, 1W, 5%, .9 PITCH
0031	472030		1	RESISTOR, 10K OHM, 1/4W, 1%, CARBON

0032	472075		3	RESISTOR, 1M OHM, 1/4W, 1%, CARBON
0033	472029		1	RESISTOR, 9.09K OHM, 1/4W, 1%, CARBON
0034	474089		1	RESISTOR PACK, 100K OHM, 2%, 8 RES, 9 PIN
0035	474090		2	RESISTOR PACK, 1K OHM, 2%, 8 RES, 9 PIN
0036	481501		3	DIODE, 1N4148, SILICON, GENERAL PURPOSE
0037	481521		1	DIODE, DF02M, BRIDGE RECTIFIER
0038	484521		2	VOLTAGE REGULATOR, 5V, LM2931AZ-5.0
0039	485510		1	VN10LM VMOS F.E.T.
0040	485514		2	TRANSISTOR, 2N7000, FETLINGTON
0041	486269		1	IC, CD4047BCN, MONOSTABLE/ASTABLE MULTIVIBR
0042	486625		1	MC74HC32N I.C. QUAD 2 INPUT OR GATE
0043	486648		2	CD4024BE I.C. 7 STAGE RIPPLE COUNTER
0044	486651		1	MM74HC138 I.C. 3 TO 8 LINE DECODER
0045	486657		1	82C51A I.C. PROGRAMMABLE COMMUNICATION
0046	486675		1	MM74HC14N, IC,CMOS
0047	486676		1	MM74HC74N, IC, CMOS
0048	486680		1	MM74HC573N, IC, CMOS
0049	486682		1	MM74HC132N, IC, CMOS
0050	486687		1	CD4020BCN, IC, CMOS DIGITIAL
0051	486689		1	NSC800N-4, IC, CMOS MICROPROCESSOR
0052	486691		1	IC, CMOS MEMORY, HM6116LP4
0054	486698		1	IC, D3-4702-9, BAUD RATE GENERATOR
0055	487055		1	IC, HCPL 2731, OPTO ISOLATOR
0056	515055		1	FUSE, 100MA, FAST BLO, 5/8 X 3/16, SIZE 00
0057	515509		1	FUSE HOLDER, FOR SIZE 00 FUSES, PC MOUNT
0058	2267-04	XX	0	TEST PROCEDURE, FRONT END BOARD, MODEL 7000

8.16 ASSY: 2267-17 00 FNT END DIGITAL BD ASSY, *****OBSOLETE SEE R-N137*

LINE	PART NO	REV	QPA	DESCRIPTION
0001	2267-02	01	1	FAB, FRONT END DIGITAL BOARD, MODEL 7000
0002	2267-03	03	0	SCHEMATIC, FRONT END DIGITAL BOARD
0003	4378-10	04	1	TRANSFORMER,ISOLATION
0004	152004		2	CAPACITOR 100UF 25V 10% ELECT. TYPE TE1211
0005	152033		4	CAP. DIPPED TANT. 10UF 25V RADIAL LEADS
0006	152050		4	CAPACITOR 1000UF,10V.,-10,+50%
0007	152057		1	CAPACITOR, 100UF, 6.3V, TANTALUM, .2" PITCH
0008	153002		1	CAPACITOR, .001, 50V, 0.1" PITCH X7R
0009	153012		1	CAPACITOR,22PF
0010	153013		1	CAPACITOR, 33PF
0011	153041		2	CAPACITOR, 56PF, 100V, .100 SP
0012	154016		17	CAPACITOR, .1UF, 50V, .100 SP
0013	154051		1	CAPACITOR, 100PF, 63V, 1%, POLYSTYRENE
0014	161038		0	FOAM TAPE,1/2"W X 3/4"L,DOUBLE-SIDED ADHESIVE
0015	180000		1	CHOKE 1 MILLIHENRI, .250 DIA X .500 LG, 10%
0016	180004		1	CHOKE 100UH
0017	210071		1	CONNECTOR, 96 PIN, PLUG, RIGHT ANGLE
0018	210078		1	CONNECTOR, 36 PIN, HEADER, SIL, GOLD CONTACT
0019	213405		1	CONNECTOR, 40 PIN, HEADER, DIL, GOLD CONTACT
0020	215004		1	IC SOCKET 40 PIN
0021	215006		3	IC SOCKET 16 PIN
0022	215016		7	14 PIN SOCKET
0023	215018		3	IC SOCKET 28 PIN
0024	215019		2	IC SOCKET 8 PIN

0025	215031	1	IC SOCKET, 20 PIN
0026	230007	1	CRYSTAL, 8MHZ
0027	230012	1	CRYSTAL, VF246, 2.4576MHZ, .2 SPACING
0028	470008	2	RESISTOR, 4.7 OHM, 1/4W, 10%, CARBON
0029	470084	1	RESISTOR, 10M OHM, 1/4W, 10%, CARBON
0030	471400	1	RESISTOR, 100M OHM, 1W, 5%, .9 PITCH
0031	472030	1	RESISTOR, 10K OHM, 1/4W, 1%, CARBON
0032	472075	3	RESISTOR, 1M OHM, 1/4W, 1%, CARBON
0033	472087	1	RESISTOR, 143K OHM, 1/4W, 1%, CARBON
0034	474089	1	RESISTOR PACK, 100K OHM, 2%, 8 RES, 9 PIN
0035	474090	2	RESISTOR PACK, 1K OHM, 2%, 8 RES, 9 PIN
0036	481501	3	DIODE, 1N4148, SILICON, GENERAL PURPOSE
0037	481521	1	DIODE, DF02M, BRIDGE RECTIFIER
0038	484521	2	VOLTAGE REGULATOR, 5V, LM2931AZ-5.0
0039	485510	1	VN10LM VMOS F.E.T.
0040	485514	2	TRANSISTOR, 2N7000, FETLINGTON
0041	486269	1	IC, CD4047BCN, MONOSTABLE/ASTABLE MULTIVIBR
0042	486625	1	MC74HC32N I.C. QUAD 2 INPUT OR GATE
0043	486648	2	CD4024BE I.C. 7 STAGE RIPPLE COUNTER
0044	486651	1	MM74HC138 I.C. 3 TO 8 LINE DECODER
0045	486657	1	82C51A I.C. PROGRAMMABLE COMMUNICATION
0046	486675	1	MM74HC14N, IC,CMOS
0047	486676	1	MM74HC74N, IC, CMOS
0048	486680	1	MM74HC573N, IC, CMOS
0049	486682	1	MM74HC132N, IC, CMOS
0050	486687	1	CD4020BCN, IC, CMOS DIGITIAL
0051	486689	1	NSC800N-4, IC, CMOS MICROPROCESSOR
0052	486691	1	IC, CMOS MEMORY, HM6116LP4
0053	486670	1	IC, CMOS EPROM, 27C64
0054	486698	1	IC, D3-4702-9, BAUD RATE GENERATOR
0055	487055	2	IC, HCPL 2731, OPTO ISOLATOR
0056	515055	1	FUSE, 100MA, FAST BLO, 5/8 X 3/16, SIZE 00
0057	515509	1	FUSE HOLDER, FOR SIZE 00 FUSES, PC MOUNT

8.17 ASSY: 2268-01 03 FRONT END ANALOG BD ASSY, MODEL 7000

LINE	PART NO	REV	QPA	DESCRIPTION
0001	2268-02	01	1	FAB, FRONT END ANALOG BOARD, MODEL 7000
0002	2268-03	03	0	SCHEMATIC, FRONT END ANALOG BOARD, MODEL 7000
0003	150004		2	CAPACITOR 680PF 5% 500V DIPPED MICA
0004	152001		1	CAPACITOR 6.8UF 25V 10% TANTALYTIC RAD. LEADS
0005	152003		2	CAPACITOR 22UF 10% 15V TANTALYTIC RADIAL
0006	153002		1	CAPACITOR, .001, 50V, 0.1" PITCH X7R
0007	153024		1	CAPACITOR,100PF,100V., CERAMIC
0008	153049		1	CAPACITOR, 560PF, 100V, .1 PITCH
0009	154016		36	CAPACITOR, .1UF, 50V, .100 SP
0010	154027		2	CAPACITOR, .0015UF,160V,1%,.6 PITCH
0011	154028		2	CAP, .22UF, 63V, +/- 5%, .200(5.1MM)SP
0012	154030		1	CAPACITOR, .068UF, 50V, .200 SP
0013	154031		1	CAPACITOR, .015UF, 50V, .200 SP
0014	154032		2	CAPACITOR,1UF,63V.,10%, POLYESTER
0015	151014		1	CAPACITOR .001UF 1% 50V MYLAR
0016	210078		1	CONNECTOR, 36 PIN, HEADER, SIL, GOLD CONTACT
0017	213404		1	CONNECTOR, 40 PIN, DUAL IN LINE
0018	215006		1	IC SOCKET 16 PIN

0019	215016	1	14 PIN SOCKET
0020	215018	1	IC SOCKET 28 PIN
0022	215031	2	IC SOCKET, 20 PIN
0023	470006	1	RESISTOR, 3.3 OHM, 1/4W, 10%, CARBON
0024	472011	2	RESISTOR, 1K OHM, 1/4W, 1%, CARBON
0026	472022	1	RESISTOR, 4.99K OHM, 1/4W, 1%, CARBON
0027	472028	1	RESISTOR, 8.06K OHM, 1/4W, 1%, CARBON
0028	472030	2	RESISTOR, 10K OHM, 1/4W, 1%, CARBON
0029	472035	1	RESISTOR, 12.7K OHM, 1/4W, 1%, CARBON
0030	472041	1	RESISTOR, 20K OHM, 1/4W, 1%, CARBON
0032	472049	1	RESISTOR, 49.9K OHM, 1/4W, 1%, CARBON
0033	472202	1	RESISTOR, 562K OHM, 1/4W, 1%
0034	472052	1	RESISTOR, 57.6K OHM, 1/4W, 1%, CARBON
0035	472058	6	RESISTOR, 100K OHM, 1/4W, 1%, CARBON
0036	472062	1	RESISTOR, 150K 0HM, 1/4W, 1%, CARBON
0037	472065	2	RESISTOR, 200K OHM, 1/4W, 1%, CARBON
0038	472070	1	RESISTOR, 402K OHM, 1/4W, 1%, CARBON
0039	472075	4	RESISTOR, 1M OHM, 1/4W, 1%, CARBON
0040	472097	2	RESISTOR, 147K OHM, 1/4W, 1%, CARBON
0042	472115	1	RESISTOR, 13K OHM, 1/4W, 1%, CARBON
0043	472123	1	RESISTOR, 60.4K OHM, 1/4W, 1%, CARBON
0044	472141	2	RESISTOR, 68.1K OHM, 1/4W, 1%
0046	472146	3	RESISTOR, 47.5K OHM, 1/4W, 1%
0047	472200	1	RESISTOR, 5.6 OHM, 1/4W, 1%
0048	472201	2	RESISTOR, 78.7K OHM, 1/4W, 1%
0050	473511	1	RESISTOR, 75K OHM, 1/4W, .1%
0051	473514	6	RESISTOR, 100K OHM, 1/4W, .1%
0052	473531	2	RESISTOR, 1K OHM, 1/4W, .1%
0053	473541	2	RESISTOR, 15K OHM, 1/4W, .1%
0054	473542	1	RESISTOR, 300K OHM, 1/4W, .1%
0055	473544	2	RESISTOR, 200K OHM, 1/4W, .1%
0056	481000	1	DIODE, ZENER, ICL8069CCQ, 1.2V TEMP V REF
0057	481501	9	DIODE, 1N4148, SILICON, GENERAL PURPOSE
0058	484014	2	NPN TRANSISTOR ZTX109C
0059	486650	1	MM74HC08N I.C. QUAD 2 INPUT AND GATE
0060	486664	1	CD 4066B QUAD BILATERAL SWITCH
0061	486675	1	MM74HC14N, IC,CMOS
0062	486677	1	MM74HC164N, IC, CMOS
0063	486682	1	MM74HC132N, IC, CMOS
0064	481026	1	DIODE, ZENER, BZY88C-4V7, 407V, 500MW
0066	486686	1	AD7581JN, IC, CMOS INTERFACE
0067	486713	1	ICM7555IPA CMOS TIMER
0068	486714	1	LM324N QUAD OP AMP
0069	486730	1	LM324AN QUAD OP-AMP
0070	486743	4	IC, TL064BCN, OP AMP LOW OFFSET
0071	486748	1	LM334Z, IC, LINEAR
0072	486751	1	IC, D TO A CONVERTER, AD7528LN
0073	486757	1	IC, TL064ACN, OP AMP LOW OFFSET
0074	486684	1	AD7524JN, IC, CMOS INTERFACE
0075	150007	2	CAPACITOR 47PF 5% 500V DIPPED MICA
0076	605050	0	#26 WIRE, BLACK
0077	472047	1	RESISTOR, 40.2K OHM, 1/4W, 1%, CARBON
0078	153016	1	CAPACITOR, 220PF,100V.,2%
0079	215009	0	TRANSISTOR PAD, SMALL

0080	2282-01	00	1	12 BIT DAC MODIFICATION BOARD ASSY
0081	161018		0	HOT MELT, SUPERSTICK
0082	2268-04	XX	0	TEST PROCEUDRE, FRONT END ANALOG BD

8.18 ASSY: 2268-17 00 FNT END ANALOG BD ASSY, ****OBSOLETE SEE R-N137***

LINE	PART NO	REV	QPA	DESCRIPTION
0001	2268-02	01	1	FAB, FRONT END ANALOG BOARD, MODEL 7000
0002	2268-03	03	0	SCHEMATIC, FRONT END ANALOG BOARD, MODEL 7000
0003	150004		2	CAPACITOR 680PF 5% 500V DIPPED MICA
0004	152001		1	CAPACITOR 6.8UF 25V 10% TANTALYTIC RAD. LEADS
0005	152003		2	CAPACITOR 22UF 10% 15V TANTALYTIC RADIAL
0006	153002		1	CAPACITOR, .001, 50V, 0.1" PITCH X7R
0007	153024		1	CAPACITOR,100PF,100V., CERAMIC
0008	153049		1	CAPACITOR, 560PF, 100V, .1 PITCH
0009	154016		40	CAPACITOR, .1UF, 50V, .100 SP
0010	154027		2	CAPACITOR, .0015UF,160V,1%,.6 PITCH
0011	154028		2	CAP, .22UF, 63V, +/- 5%, .200(5.1MM)SP
0012	154030		1	CAPACITOR, .068UF, 50V, .200 SP
0013	154031		1	CAPACITOR, .015UF, 50V, .200 SP
0014	154032		2	CAPACITOR,1UF,63V.,10%, POLYESTER
0015	154044		1	CAPACITOR, 1000PF, 50V, 10%, POLYPROPELENE
0016	210078		1	CONNECTOR, 36 PIN, HEADER, SIL, GOLD CONTACT
0017	213404		1	CONNECTOR, 40 PIN, DUAL IN LINE
0018	215006		1	IC SOCKET 16 PIN
0019	215016		12	14 PIN SOCKET
0020	215018		1	IC SOCKET 28 PIN
0021	215019		1	IC SOCKET 8 PIN
0022	215031		2	IC SOCKET, 20 PIN
0023	470006		1	RESISTOR, 3.3 OHM, 1/4W, 10%, CARBON
0024	472011		2	RESISTOR, 1K OHM, 1/4W, 1%, CARBON
0025	472021		2	RESISTOR, 4.75K OHM, 1/4W, 1%, CARBON
0026	472022		1	RESISTOR, 4.99K OHM, 1/4W, 1%, CARBON
0027	472028		1	RESISTOR, 8.06K OHM, 1/4W, 1%, CARBON
0028	472030		2	RESISTOR, 10K OHM, 1/4W, 1%, CARBON
0029	472035		1	RESISTOR, 12.7K OHM, 1/4W, 1%, CARBON
0030	472041		1	RESISTOR, 20K OHM, 1/4W, 1%, CARBON
0031	472043		1	RESISTOR, 24.9K OHM, 1/4W, 1%, CARBON
0032	472049		1	RESISTOR, 49.9K OHM, 1/4W, 1%, CARBON
0033	472183		1	RESISTOR, 357K OHM, 1/4W, 1%
0034	472052		1	RESISTOR, 57.6K OHM, 1/4W, 1%, CARBON
0035	472058		8	RESISTOR, 100K OHM, 1/4W, 1%, CARBON
0036	472062		1	RESISTOR, 150K OHM, 1/4W, 1%, CARBON
0037	472065		3	RESISTOR, 200K OHM, 1/4W, 1%, CARBON
0038	472070		1	RESISTOR, 402K OHM, 1/4W, 1%, CARBON
0039	472075		3	RESISTOR, 1M OHM, 1/4W, 1%, CARBON
0040	472097		2	RESISTOR, 147K OHM, 1/4W, 1%, CARBON
0041	472258		2	RESISTOR, 4.32K OHM, 1/4W, 1%
0042	472115		1	RESISTOR, 13K OHM, 1/4W, 1%, CARBON
0043	472123		1	RESISTOR, 60.4K OHM, 1/4W, 1%, CARBON
0044	472141		2	RESISTOR, 68.1K OHM, 1/4W, 1%
0045	472098		2	RESISTOR, 17.4K OHM, 1/4W, 1%, CARBON
0046	472146		1	RESISTOR, 47.5K OHM, 1/4W, 1%
0047	472200		1	RESISTOR, 5.6 OHM, 1/4W, 1%

0048	472201	2	RESISTOR, 78.7K OHM, 1/4W, 1%
0049	472250	1	RESISTOR, 510K OHM, 1/4W, 1%, METAL FILM
0050	473511	1	RESISTOR, 75K OHM, 1/4W, .1%
0051	473514	6	RESISTOR, 100K OHM, 1/4W, .1%
0052	473531	2	RESISTOR, 1K OHM, 1/4W, .1%
0053	473541	2	RESISTOR, 15K OHM, 1/4W, .1%
0054	473542	1	RESISTOR, 300K OHM, 1/4W, .1%
0055	473544	2	RESISTOR, 200K OHM, 1/4W, .1%
0056	481000	1	DIODE, ZENER, ICL8069CCQ, 1.2V TEMP V REF
0057	481501	9	DIODE, 1N4148, SILICON, GENERAL PURPOSE
0058	484014	2	NPN TRANSISTOR ZTX109C
0059	486650	1	MM74HC08N I.C. QUAD 2 INPUT AND GATE
0060	486664	1	CD 4066B QUAD BILATERAL SWITCH
0061	486675	1	MM74HC14N, IC,CMOS
0062	486677	1	MM74HC164N, IC, CMOS
0063	486682	1	MM74HC132N, IC, CMOS
0064	481026	1	DIODE, ZENER, BZY88C-4V7, 407V, 500MW
0065	486685	1	AD7528JN, IC, CMOS INTERFACE
0066	486686	1	AD7581JN, IC, CMOS INTERFACE
0067	486713	1	ICM7555IPA CMOS TIMER
0068	486714	1	LM324N QUAD OP AMP
0069	486730	1	LM324AN QUAD OP-AMP
0070	486743	4	IC, TL064BCN, OP AMP LOW OFFSET
0071	486748	1	LM334Z, IC, LINEAR
0072	486751	1	IC, D TO A CONVERTER, AD7528LN
0073	486757	1	IC, TLO64ACN, OP AMP LOW OFFSET
0074	486762	1	IC, AD7524, 8 BIT, D TO A CONVERTER

8.19 ASSY: 5088-01 06 BEZEL ASSY, MODEL 7000

LINE	PART NO	REV	QPA	DESCRIPTION
0001	4999-01	03	1	MEMBRANE KEYPANEL ASSY, MODEL 7000
0002	5218-01	02	1	SENSOR CAL RECEPTACLE ASSY, MODEL 7000
0003	4984-13	02	1	BEZEL, PAINTED, MODEL 7000
0004	4998-01	02	1	CO2 INPUT HARNESS, MODEL 7000
0005	5010-10	00	1	RIBBON CABLE ASSY, 20 PIN, MODEL 7000
0006	281500		0	4-40 HEXNUT MACHINE SCREW-STEEL CADMIUM
0007	284200		0	#4-40 X 1/4 SLOTTED BINDING HEAD
0009	285000		0	#4 WASHER, INTERN TOOTH LOCK WASHER
0010	285017		0	FLT WSHR, .189 ID X .379 OD X .015 THK
0011	5221-01	02	1	SAO2 INPUT HARNESS, MODEL 7000
0012	161064		0	TAPE, 3/4 X 60 YDS, CLEAR, DOUBLE-SIDED

8.20 ASSY: 5062-01 00 SAO2 INPUT HARNESS, MOD 7000**OBSOLETE SEE R-N150*

LINE	PART NO	REV	QPA	DESCRIPTION
0001	210068		7	PIN, CRIMP, MINI PV RECEPTACLE
0002	210075		7	CONTACT, FEMALE, 20-24AWG, CRIMP, GOLD/NICKEL
0003	212204		1	CONNECTOR, 14 PIN, HOUSING, W/O POLARIZATION
0004	212513		1	CONNECTOR, HOUSING, RECEPTACLE, 20 PIN
0005	8653-10	02	0	CABLE SHIELDED, 4 CONDUCTORS & 1 TWISTED SHLD
0006	210067		1	PLUG, POLARIZATION, WHITE NYLON
0007	608005		0	TUBING, HEAT SHRINK, 1/16" DIA, BLACK
0008	608011		0	TUBING, HEAT SHRINK, 3/16" DIA, BLACK

8.21 ASSY: 5007-06 XX OPTION LIST, MODEL 7000

LINE	PART NO	REV	QPA	DESCRIPTION
0001	4981-00	03	0	CAPNOSTAT CO2 SENSOR
0003	8686-00	07	0	RE-FLEX SENSOR FINAL ASSY
0004	8619-00	09	0	EAR SENSOR FINAL ASSEMBLY
0005	8660-00	10	0	FINGER SENSOR FINAL ASSEMBLY
0006	4989-00	03	0	STANDARD AIRWAY ADAPTER, CARTON OF 10,
0007	2410-01	01	0	DIGITAL EXTENDER BD ASSY, MODEL 7000
0008	2411-01	01	0	INPUT EXTENDER BD ASSY, MODEL 7000
0009	4871-00	00	0	OPTION KIT, 240V AC, MODEL 7000
0010	5200-00		0	INTFC CABLE ASSY, *****OBSOLETE SEE 5331-00**
0011	5142-00	00	0	CARRYING CASE WITH LOGO PATCH, MODEL 7000
0012	5139-00	00	0	RECORDER CABLE, MODEL 7000/7000 TO MODEL 350
0013	5133-00	00	0	WAVEFORM ADPTR ASSY, MODEL 7000 TO N100/N200
0014	5222-00	00	0	EXTENSION CABLE ASSY, 1 1/2 FT, SA02 SENSORS
0015	5140-00	01	0	THINKJET PRINTER, MODEL 7000
0016	5287-00	00	0	CABLE ASSY, ANALOG OUTPUT OPEN END

8.22 ASSY: 4998-01 02 CO2 INPUT HARNESS, MODEL 7000

LINE	PART NO	REV	QPA	DESCRIPTION
0001	210068		0	PIN, CRIMP, MINI PV RECEPTACLE
0002	210075		16	CONTACT, FEMALE, 20-24AWG, CRIMP, GOLD/NICKEL
0003	210077		1	CONNECTOR, 38 PIN, MINI LATCH HOUSING, BLACK
0004	212511		1	CONNECTOR, HOUSING, RECEPTACLE, 20 PIN, BLACK
0005	605103		0	#24 STRANDED WIRE, BLACK
0006	605104		0	#24 STRANDED WIRE, BROWN
0007	605105		0	#24 STRANDED WIRE, RED
0008	605106		0	#24 STRANDED WIRE, ORANGE
0010	605108		0	#24 STRANDED WIRE, GREEN
0011	605109		0	#24 STRANDED WIRE, BLUE
0012	605110		0	#24 STRANDED WIRE, VIOLET
0013	605111		0	#24 STRANDED WIRE, GRAY
0014	605112		0	#24 STRANDED WIRE, WHITE
0015	605113		0	#24 STRANDED WIRE, WHITE/BLACK
0016	605114		0	#24 STRANDED WIRE, WHITE/BROWN
0017	605115		0	#24 STRANDED WIRE, WHITE/RED
0018	608001		0	CABLE TIE, .094 X 3.62L, SELF-LKG

8.23 ASSY: 5013-01 02 REGULATOR HARNESS ASSY, MODEL 7000

LINE	PART NO	REV	QPA	DESCRIPTION
0001	210022		0	SOCKET REEL (GOLD) USE WITH 211612-6 PIN
0002	211305		1	3 CKT.SOCKET HSG. MINIATURE RECTANGULAR
0003	215007		1	SOCKET FOR TO-3 TRANSISTORS (KIT)
0004	605253		0	#18 HOOKUP WIRE, RED
0005	605257		0	#18 HOOKUP WIRE, BLUE
0006	605258		0	#18 HOOKUP WIRE, BROWN
0007	608001		0	CABLE TIE, .094 X 3.62L, SELF-LKG
0008	608003		0	TUBING, HEAT SHRINK, 1/8" DIA, BLACK

8.24 ASSY: 4959-01 03 SENSOR CAL RCPT ASSY, 1260***OBSOLETE SEE R-N161**

LINE	PART NO	REV	QPA	DESCRIPTION
0001	4959-16	04	1	SENSOR CALIBRATION RECEPTACLE, MODEL 7000

0002	5220-01	00	1	CAL SWITCH ASSY, 7000**OBSOLETE
0003	5026-01	05	1	SPAN REFERENCE CELL HOLDER ASSY, MODEL 7000
0004	5027-01	04	1	ZERO REFERENCE CELL HOLDER ASSY, MODEL 7000
0005	161007		0	SUPERBONDER 414 ADHESIVE
0006	284201		0	#4-40 X 5/16 SLOTTED BINDING HEAD STEEL CAD.
0009	5178-32	00	1	LABEL, "48" TORR VALUE, SPAN CELL, MDL 7000
0009	5179-32	00	0	LABEL, "49" TORR VALUE, SPAN CELL, MDL 7000
0009	5180-32	00	0	LABEL, "50" TORR VALUE, SPAN CELL, MDL 7000
0009	5181-32	00	0	LABEL, "51" TORR VALUE, SPAN CELL, MDL 7000
0009	5182-32	00	0	LABEL, "52" TORR VALUE, SPAN CELL, MDL 7000
0009	5183-32	00	0	LABEL, "53" TORR VALUE, SPAN CELL, MDL 7000
0009	5184-32	00	0	LABEL, "54" TORR VALUE, SPAN CELL, MDL 7000
0009	5185-32	00	0	LABEL, "55" TORR VALUE, SPAN CELL, MDL 7000
0009	5186-32	00	0	LABEL, "56" TORR VALUE, SPAN CELL, MDL 7000
0009	5187-32	00	0	LABEL, "57" TORR VALUE, SPAN CELL, MDL 7000
0009	5188-32	00	0	LABEL, "58" TORR VALUE, SPAN CELL, MDL 7000
0009	5189-32	00	0	LABEL, "59" TORR VALUE, SPAN CELL, MDL 7000
0009	5190-32	00	0	LABEL, "60" TORR VALUE, SPAN CELL, MDL 7000
0009	5191-32	00	0	LABEL, "61" TORR VALUE, SPAN CELL, MDL 7000
0009	5192-32	00	0	LABEL, "62" TORR VALUE, SPAN CELL, MDL 7000
0009	5193-32	00	0	LABEL, "63" TORR VALUE, SPAN CELL, MDL 7000
0009	5194-32	00	0	LABEL, "64" TORR VALUE, SPAN CELL, MDL 7000
0010	4959-04	XX	0	TEST PROCEDURE, SENSOR CAL RCPT, MODEL 7000

8.25 ASSY: 5218-01 02 SENSOR CAL RECEPTACLE ASSY, MODEL 7000

LINE	PART NO	REV	QPA	DESCRIPTION
0001	4959-16	04	1	SENSOR CALIBRATION RECEPTACLE, MODEL 7000
0002	5025-01	03	1	CAL CELL HARNESS ASSY, MODEL 7000
0003	5382-01	P0	1	ZERO/SPAN REFERENCE CELL HLDR SET ASSY
0005	5178-32	00	1	LABEL, "48" TORR VALUE, SPAN CELL, MDL 7000
0005	5179-32	00	0	LABEL, "49" TORR VALUE, SPAN CELL, MDL 7000
0005	5180-32	00	0	LABEL, "50" TORR VALUE, SPAN CELL, MDL 7000
0005	5181-32	00	0	LABEL, "51" TORR VALUE, SPAN CELL, MDL 7000
0005	5182-32	00	0	LABEL, "52" TORR VALUE, SPAN CELL, MDL 7000
0005	5183-32	00	0	LABEL, "53" TORR VALUE, SPAN CELL, MDL 7000
0005	5184-32	00	0	LABEL, "54" TORR VALUE, SPAN CELL, MDL 7000
0005	5185-32	00	0	LABEL, "55" TORR VALUE, SPAN CELL, MDL 7000
0005	5186-32	00	0	LABEL, "56" TORR VALUE, SPAN CELL, MDL 7000
0005	5187-32	00	0	LABEL, "57" TORR VALUE, SPAN CELL, MDL 7000
0005	5188-32	00	0	LABEL, "58" TORR VALUE, SPAN CELL, MDL 7000
0005	5189-32	00	0	LABEL, "59" TORR VALUE, SPAN CELL, MDL 7000
0005	5190-32	00	0	LABEL, "60" TORR VALUE, SPAN CELL, MDL 7000
0005	5191-32	00	0	LABEL, "61" TORR VALUE, SPAN CELL, MDL 7000
0005	5192-32	00	0	LABEL, "62" TORR VALUE, SPAN CELL, MDL 7000
0005	5193-32	00	0	LABEL, "63" TORR VALUE, SPAN CELL, MDL 7000
0005	5194-32	00	0	LABEL, "64" TORR VALUE, SPAN CELL, MDL 7000
0006	161007		0	SUPERBONDER 414 ADHESIVE
0007	281509		0	2-56 HEXNUT, MACHINE SCREW, STEEL-CAD
0008	281213		0	SCREW, 2-56 X 9/16 L, SLOTTED BINDING HEAD
0009	512002		2	SWITCH, SPDT, 115V AC, 5A, LEVER, SUBMINI
0010	605103		0	#24 STRANDED WIRE, BLACK
0011	608001		0	CABLE TIE, .094 X 3.62L, SELF-LKG
0012	608003		0	TUBING, HEAT SHRINK, 1/8" DIA, BLACK
0013	608004		0	TUBING, HEAT SHRINK, 3/32" DIA, BLACK

0014	608005		0	TUBING, HEAT SHRINK, 1/16" DIA, BLACK
0015	161008		0	LOCTITE THREADLOCKER 242 ADHESIVE/SEALANT
0016	5218-04	XX	0	TEST PROCEDURE, SENSOR CAL RCPT, MODEL 7000

9.0 Schematics and Assembly Drawings

1. 5007-09-01 Overall Wiring Diagram, Model 7000
2. 5007-09-01 Overall Wiring Diagram, Model 7000
3. 5007-09-01 Overall Wiring Diagram, Model 7000
4. 4985-10-01 Transformer, Model 1260 and 7000
5. 4999-27-02 Membrane Keypanel, Model 7000
6. 2400-01-04 Mother Board Assy, Model 1260
7. 2400-03-04 Schematic, Mother Board, Model 1260
8. 2400-03-04 Schematic, Mother Board, Model 1260
9. 2401-01-01 Power Supply Assy, Model 1260
10. 2401-03-01 Schematic, Power Supply Board, Model 1260
11. 2402-01-03 CPU Memory Board Assembly, Model 1260
12. 2402-03-03 Schematic, CPU Memory Board Model 1260
13. 2403-01-03 Main CPU Board Assy, Model 1260
14. 2403-03-03 Schematic, Main CPU Board, Model 1260
15. 2404-01-02 Video Controller Board Assy, Model 1260
16. 2404-03-02 Schematic, Video Controller Board, Model 1260
17. 2405-01-03 RAM SIMM Board Assy, Model 1260
18. 2405-03-03 Schematic, RAM SIMM Board, Model 1260
19. 2407-01-03* Front End Board Assy (CTC), Model 1260
20. 2407-03-03* Schematic, Front End Board (CTC), Model 1260
21. 2409-01-01* Piggyback Board Assy (CTC), Model 1260
22. 2409-03-01* Schematic, Piggyback Board, Model 1260
23. 2418-01-02 Piggyback Board Assy, Model 1260 and 7000
24. 2418-03-02 Schematic, Piggyback Board, Model 1260 and 7000
25. 2421-01-00 Front End Board Assy, Model 1260 and 7000
26. 2421-03-00 Schematic, Front End Board, Model 1260 and 7000
27. 2267-01-01 Assembly Front End Board, Digital

28. 2267-03-01 Schematic, Saturation Front End Board, Digital
29. 2268-01-01 Saturation Analog Front End Board
30. 2268-03-01 Schematic, Saturation Front End Analog Board
31. 2268-03-01 Schematic, Saturation Front End Analog Board
32. 5067-00-00* Adapter Cable Assy, Model 500 Sensor to Model 7000
33. 5006-01-02 Power Harness Assy, Model 1260
34. 4998-01-01 CO_2 Input Harness, Model 1260
35. 5062-01-00 O_2 Input Harness Assy, Model 7000
36. 5074-10-01 Ribbon Cable, Rear Panel, Model 1260
37. 5013-01-01 Regulator Harness Assy, Model 1260
38. 4959-01-02 Sensor Cal Rcpt Assy, Model 1260
39. 5055-01-02 Rear Panel Assembly, Model 1260
40. 5007-01-02 Main Assy, Metal Box, Model 7000
41. 5007-01-02 Main Assy, Metal Box, Model 7000
42. 5088-01-02 Bezel Assy, Model 7000
43. 5007-00-02 Final Assy, Metal Box, Model 7000

*Denotes drawings associated with earlier units.

28. 2267-03-01 Schematic, Saturation Front End Board, Digital
29. 2268-01-01 Saturation Analog Front End Board
30. 2268-03-01 Schematic, Saturation Front End Analog Board
31. 2268-03-01 Schematic, Saturation Front End Analog Board
32. 5067-00-00* Adapter Cable Assy, Model 500 Sensor to Model 7000
33. 5006-01-02 Power Harness Assy, Model 1260
34. 4998-01-01 CO_2 Input Harness, Model 1260
35. 5062-01-00 O_2 Input Harness Assy, Model 7000
36. 5074-10-01 Ribbon Cable, Rear Panel, Model 1260
37. 5013-01-01 Regulator Harness Assy, Model 1260
38. 4959-01-02 Sensor Cal Rcpt Assy, Model 1260
39. 5055-01-02 Rear Panel Assembly, Model 1260
40. 5007-01-02 Main Assy, Metal Box, Model 7000
41. 5007-01-02 Main Assy, Metal Box, Model 7000
42. 5088-01-02 Bezel Assy, Model 7000
43. 5007-00-02 Final Assy, Metal Box, Model 7000

*Denotes drawings associated with earlier units.

This document contains information which is proprietary and the property of Novametrix Medical Systems Inc. and may not be reproduced, used or disclosed in whole or in part without the written consent of Novametrix Medical Systems Inc.

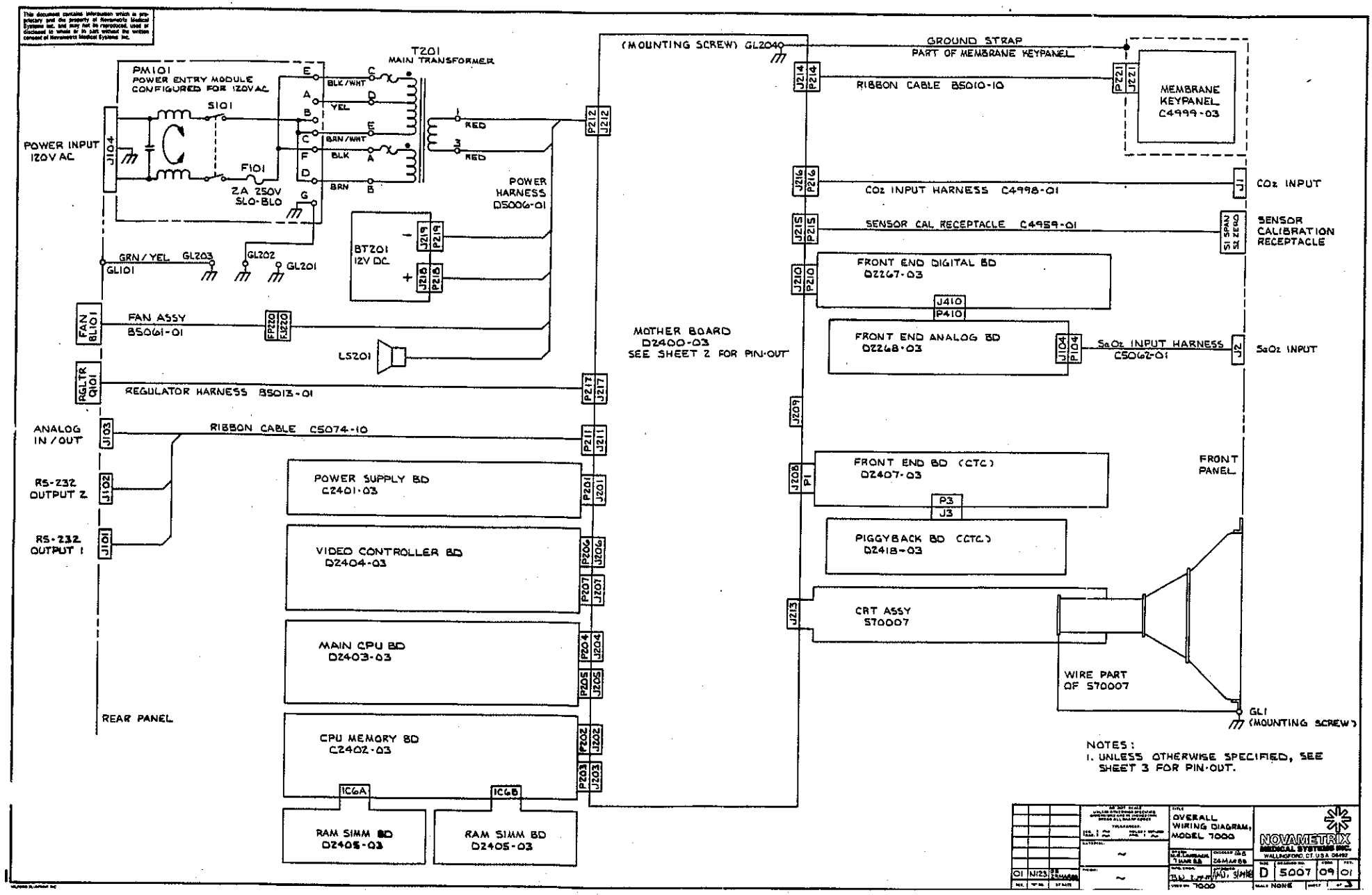

This document contains information which is proprietary and the property of Novametrix Medical Systems Inc. and may not be reproduced, used or disclosed in whole or in part without the written consent of Novametrix Medical Systems Inc.

BACK PANEL HEADER

P211	J211			J211	P211
1	1	KEY	DAC3	2	2
3	3	DAC1	DAC2	4	4
5	5	SYS GND	SYS GND	6	6
7	7	AGND	AGND	8	8
9	9	A/D 1	A/D 2	10	10
11	11	A/D 3	UNUSED	12	12
13	13	UNUSED	UNUSED	14	14
15	15	DATA IN3	XMITT3	16	16
17	17	RTS3	CTS3	18	18
19	19	COMM GND1	DATA IN4	20	20
21	21	XMITT4	RTS4	22	22
23	23	CTS4	COMM GND2	24	24

POWER SUPPLY HEADER

P201	J201			J201	P201
A1	A1	SYS GND	SYS GND	B1	B1
A2	A2	SYS GND	SYS GND	B2	B2
A3	A3	SYS GND	SYS GND	B3	B3
A4	A4	+12V	+12V	B4	B4
A5	A5	+12V	+12V	B5	B5
A6	A6	UNUSED	UNUSED	B6	B6
A7	A7	BATTERY (+)	BATTERY (+)	B7	B7
A8	A8	BATTERY (+)	BATTERY (+)	B8	B8
A9	A9	UNUSED	UNUSED	B9	B9
A10	A10	+5V	+5V	B10	B10
A11	A11	+5V	+5V	B11	B11
A12	A12	+5V	+5V	B12	B12
A13	A13	UNUSED	UNUSED	B13	B13
A14	A14	CRT/FAN +V	CRT/FAN +V	B14	B14
A15	A15	UNUSED	UNUSED	B15	B15
A16	A16	+15V	+15V	B16	B16
A17	A17	+15V	+15V	B17	B17
A18	A18	UNUSED	UNUSED	B18	B18
A19	A19	UNUSED	UNUSED	B19	B19
A20	A20	-15V	-15V	B20	B20
A21	A21	-15V	-15V	B21	B21
A22	A22	UNUSED	UNUSED	B22	B22
A23	A23	UNUSED	UNUSED	B23	B23
A24	A24	POWER SWITCH	SYS GND	B24	B24
A25	A25	PLED HOT	SYS GND	B25	B25
A26	A26	AC LED HOT	SYS GND	B26	B26
A27	A27	UNUSED	UNUSED	B27	B27
A28	A28	UNUSED	BATTERY ON	B28	B28
A29	A29	UNUSED	UNUSED	B29	B29
A30	A30	SYS GND	SYS GND	B30	B30
A31	A31	SYS GND	SYS GND	B31	B31
A32	A32	SYS GND	SYS GND	B32	B32

CRT HEADER

	J213
SYS GND	1
BRIGHTNESS HIGH	2
BRIGHTNESS LOW	3
BRIGHTNESS CENTER	4
UNUSED	5
HSYNC	6
CRT/FAN +V	7
VIDEO	8
VSYNC	9
SYS GND	10

P203	J203	CPU MEMORY BOARD		J203	P203
P205	J205	MAIN CPU BOARD		J205	P205
P207	J207	VIDEO CONTROLLER BOARD		J207	P207
A1	A1	CRT DTACK*	SYS GND	B1	B1
A2	A2	INT*	DE*	B2	B2
A3	A3	ADDR1	SYSTEM RST*	B3	B3
A4	A4	ADDR2	ADDR23	B4	B4
A5	A5	ADDR3	ADDR22	B5	B5
A6	A6	ADDR4	ADDR21	B6	B6
A7	A7	ADDR5	ADDR20	B7	B7
A8	A8	ADDR6	ADDR19	B8	B8
A9	A9	ADDR7	ADDR18	B9	B9
A10	A10	ADDR8	ADDR17	B10	B10
A11	A11	ADDR9	ADDR16	B11	B11
A12	A12	ADDR10	ADDR15	B12	B12
A13	A13	ADDR11	ADDR14	B13	B13
A14	A14	ADDR12	ADDR13	B14	B14
A15	A15	DATA 0	DATA 15	B15	B15
A16	A16	DATA 1	DATA 14	B16	B16
A17	A17	DATA 2	DATA 13	B17	B17
A18	A18	DATA 3	DATA 12	B18	B18
A19	A19	DATA 4	DATA 11	B19	B19
A20	A20	DATA 5	DATA 10	B20	B20
A21	A21	DATA 6	DATA 9	B21	B21
A22	A22	DATA 7	DATA 8	B22	B22
A23	A23	LBRE*	LBWE*	B23	B23
A24	A24	UBRE*	UBWE*	B24	B24
A25	A25	SWITCH 1	SWITCH 5	B25	B25
A26	A26	SWITCH 2	SWITCH 6	B26	B26
A27	A27	SWITCH 3	SWITCH 7	B27	B27
A28	A28	SWITCH 4	UNUSED	B28	B28
A29	A29	LED 1	LED 4	B29	B29
A30	A30	LED 2	LED 5	B30	B30
A31	A31	LED 3	SPARE OUT	B31	B31
A32	A32	R/W*	UNUSED	B32	B32

P202	J202	CPU MEMORY BOARD		J202	P202
P204	J204	MAIN CPU BOARD		J204	P204
P206	J206	VIDEO CONTROLLER BOARD		J206	P206
A1	A1	SYS GND	SYS GND	B1	B1
A2	A2	UNUSED	U4&U5 E*	B2	B2
A3	A3	+5V	U2&U3 E*	B3	B3
A4	A4	CSU1*	+15V	B4	B4
A5	A5	-15V	A/D CS*	B5	B5
A6	A6	CSU2*	BATTERY (+)	B6	B6
A7	A7	CSU3*	CSU4*	B7	B7
A8	A8	INT2*	INT6*	B8	B8
A9	A9	MUX CS*	DTR2	B9	B9
A10	A10	DTR1	CRT INT*	B10	B10
A11	A11	DATA IN1	DATA IN2	B11	B11
A12	A12	XMITT1	XMITT2	B12	B12
A13	A13	CTS1	CTS2	B13	B13
A14	A14	RTS1	RTS2	B14	B14
A15	A15	DATA IN3	DATA IN4	B15	B15
A16	A16	XMITT3	XMITT4	B16	B16
A17	A17	CTS3	CTS4	B17	B17
A18	A18	RTS3	RTS4	B18	B18
A19	A19	COMM GND1	COMM GND2	B19	B19
A20	A20	VIDEO	BRIGHT HIGH	B20	B20
A21	A21	HSYNC	BRIGHT CENTER	B21	B21
A22	A22	VSYNC	BRIGHT LOW	B22	B22
A23	A23	AGND	AGND	B23	B23
A24	A24	A/D 1	A/D 2	B24	B24
A25	A25	A/D 3	DAC 1	B25	B25
A26	A26	DAC 2	DAC 3	B26	B26
A27	A27	I/O 1	BATTERY ON	B27	B27
A28	A28	SPAN SWITCH	WATCHDOG RST*	B28	B28
A29	A29	ZERO SWITCH	I/O 7	B29	B29
A30	A30	I/O 4	I/O 8	B30	B30
A31	A31	SPEAKER (+)	ACRTC CS*	B31	B31
A32	A32	UNUSED	DAC 4	B32	B32

POWER HEADER

	J212	P212	
BATTERY (+)	1	1	BATTERY (+)
CRT/FAN +V	2	2	FAN (+)
SYS GND	3	3	BATTERY (-)
AC IN	4	4	
AC IN	5	5	
SYS GND	6	6	FAN (-)
SYS GND	7	7	SPEAKER (-)
SPEAKER (+)	8	8	SPEAKER (+)

3 TERMINAL REGULATOR HEADER

	J217	P217	
RAW DC	1	1	VIN
REGULATOR OUT	2	2	VOUT
ADJ	3	3	ADJ

P1	J208	FRONT END BOARD (CTC)		J208	P1
P209	J209	UNUSED		J209	P209
P210	J210	FRONT END DIGITAL BOARD		J210	P210
A1	A1	AGND1	UNUSED	B17	B17
A2	A2	DATA OUT	UNUSED	B18	B18
A3	A3	VB DATA	+5V	B19	B19
A4	A4	VB	UNUSED	B20	B20
A5	A5	SIGNAL 10	INT1*	B21	B21
A6	A6	SIGNAL 13	INT2*	B22	B22
A7	A7	AGND2	INT3*	B23	B23
A8	A8	SIGNAL 16	DTR2	B24	B24
A9	A9	SIGNAL 19	DTR1	B25	B25
A10	A10	SIGNAL 22	SYSTEM RST*	B26	B26
A11	A11	SIGNAL 25	A/D 2	B27	B27
A12	A12	HEATER CONTROL	UNUSED	B28	B28
A13	A13	SIGNAL 31	DAC2	B29	B29
A14	A14	UNUSED	I/O 2	B30	B30
A15	A15	UNUSED	BATTERY ON	B31	B31
A16	A16	SHIELD	I/O 8	B32	B32
A17	A17	UNUSED	AGND1	C1	C1
A18	A18	+5V	SIGNAL 3	C2	C2
A19	A19	UNUSED	T2	C3	C3
A20	A20	+15V	HEATER	C4	C4
A21	A21	UNUSED	BOOST	C5	C5
A22	A22	DATA IN1	SOURCE	C6	C6
A23	A23	XMITT1	AGND4	C7	C7
A24	A24	S/H RESET	SIGNAL 18	C8	C8
A25	A25	CTS1	SIGNAL 21	C9	C9
A26	A26	UNUSED	SIGNAL 24	C10	C10
A27	A27	A/D 1	SIGNAL 27	C11	C11
A28	A28	UNUSED	SIGNAL 30	C12	C12
A29	A29	DAC1	SIGNAL 33	C13	C13
A30	A30	I/O 1	UNUSED	C14	C14
A31	A31	I/O 4	UNUSED	C15	C15
A32	A32	I/O 7	SHIELD	C16	C16
B1	B1	AGND1	UNUSED	C17	C17
B2	B2	REF OUT	-15V	C18	C18
B3	B3	VB REF	UNUSED	C19	C19
B4	B4	SIGNAL 8	RAW DC	C20	C20
B5	B5	SIGNAL 11	UNUSED	C21	C21
B6	B6	SIGNAL 14	DATA IN2	C22	C22
B7	B7	AGND3	XMITT2	C23	C23
B8	B8	SIGNAL 17	RTS2	C24	C24
B9	B9	SIGNAL 20	CTS2	C25	C25
B10	B10	SIGNAL 23	UNUSED	C26	C26
B11	B11	SIGNAL 26	A/D 3	C27	C27
B12	B12	SIGNAL 29	UNUSED	C28	C28
B13	B13	SIGNAL 32	DAC3	C29	C29
B14	B14	UNUSED	I/O 3	C30	C30
B15	B15	UNUSED	I/O 6	C31	C31
B16	B16	SHIELD	I/O 9	C32	C32

MOTHER BOARD GROUND CONNECTIONS

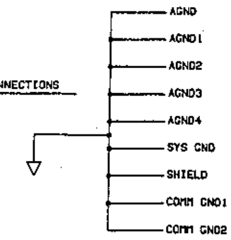

TRANSDUCER HEADER

P216	J216			J216	P216
1	1	DATA OUT	SIGNAL 16	2	2
3	3	REF OUT	SIGNAL 17	4	4
5	5	SIGNAL 3	SIGNAL 18	6	6
7	7	VB DATA	SIGNAL 19	8	8
9	9	VB REF	SIGNAL 20	10	10
11	11	T2	SIGNAL 21	12	12
13	13	VB	SIGNAL 22	14	14
15	15	SIGNAL 8	SIGNAL 23	16	16
17	17	HEATER	SIGNAL 24	18	18
19	19	SIGNAL 10	SIGNAL 25	20	20
21	21	SIGNAL 11	SIGNAL 26	22	22
23	23	BOOST	SIGNAL 27	24	24
25	25	SIGNAL 13	HEATERCONTROL	26	26
27	27	SIGNAL 14	SIGNAL 29	28	28
29	29	SOURCE	SHIELD	30	30
31	31	AGND 1	AGND 2	32	32
33	33	AGND 3	AGND 4	34	34
35	35	+5V	-15V	36	36
37	37	+15V	KEY	38	38

CAL CELL HEADER

P215	J215			J215	P215
1	1	I/O 1	UNUSED	2	2
3	3	SPAN SWITCH	I/O 6	4	4
5	5	ZERO SWITCH	I/O 7	6	6
7	7	I/O 4	SYS GND	8	8
9	9	+5V	-15V	10	10
11	11	+15V	KEY	12	12
13	13	UNUSED	UNUSED	14	14

FRONT PANEL HEADER

	P221	P214	J214			J214	P214	P221
	1	1	1	SWITCH 1	SWITCH 5	2	2	2
	3	3	3	SWITCH 2	SWITCH 6	4	4	4
	5	5	5	SWITCH 3	SWITCH 7	6	6	6
	7	7	7	SWITCH 4	POWER SWITCH	8	8	8
(2 MIN)	9	9	9	LED 1	LED 4	10	10	10
(AUDIO OFF)	11	11	11	LED 2	LED 5	12	12	12
(ALERT RESET)	13	13	13	LED 3	PLED HOT	14	14	14
	15	15	15	AC LED HOT	+5V	16	16	16
	17	17	17	SYS GND	KEY	18	18	18
	19	19	19	UNUSED	UNUSED	20	20	20

MOTHER BOARD

OVERALL WIRING DIAGRAM, MODEL 7000

NOVAMETRIX MEDICAL SYSTEMS INC. WALLINGFORD, CT. U.S.A. 06492

D 5007

SHEET 2

This document contains information which is proprietary and the property of Novametrix Medical Systems Inc. and may not be reproduced, used or disclosed in whole or in part without the written consent of Novametrix Medical Systems Inc.

SENSOR CALIBRATION RECEPTACLE

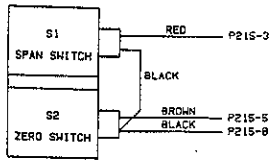

O2 INPUT CONNECTOR

	P104	J2			J2	P104	
	N/C	1	UNUSED	RED-LED DRIVE	11	3	RED
GREEN	6	2	VELDI-COMM ANODE	UNUSED	12	N/C	
	N/C	3	UNUSED	UNUSED	13	N/C	
WHITE	2	4	PHOTO DIODE-ANODE	UNUSED	14	N/C	
BLACK	1	5	PHOTO DIODE-CATHODE	EAR PROBE DETECTOR	15	5	ORANGE
WHITE/BLACK	7	6	GROUND - 1 SHIELD	UNUSED	16	N/C	
	N/C	7	UNUSED	UNUSED	17	N/C	
BLUE	4	8	INF-RED-LED DRIVE	UNUSED	18	N/C	
	N/C	9	UNUSED	UNUSED	19	N/C	
	N/C	10	UNUSED	UNUSED	20	N/C	

CO2 INPUT CONNECTOR

	P216	J1			J1	P216	
WHITE	29	1	SOURCE	UNUSED	11	N/C	
	N/C	2	UNUSED	-15V	12	36	BROWN
GREY	9	3	VB REF	SHIELD	13	30	ORANGE
BLUE	3	4	REF OUT	VB	14	13	WHITE/RED
	N/C	5	UNUSED	T2	15	11	VIOLET
RED	1	6	DATA OUT	HEATER CONTROL	16	26	RED
YELLOW	7	7	VB DATA	BOOST	17	23	BLACK
	N/C	8	UNUSED	+15V	18	36	BROWN
GREEN	17	9	HEATER	+16V	19	37	GREEN
ORANGE	30	10	SHIELD	AGND1	20	31	YELLOW

FRONT BEZEL

FRONT BEZEL MEMBRANE CONNECTOR

P214	P221	J221			J221	P221	P214
1	1	1	SWITCH 1	SWITCH 5	2	2	2
3	3	3	SWITCH 2	SWITCH 6	4	4	4
5	5	5	SWITCH 3	SWITCH 7	6	6	6
7	7	7	SWITCH 4	POWER SWITCH	8	8	8
9	9	9	LED 1	LED 4	10	10	10
11	11	11	LED 2	LED 5	12	12	12
13	13	13	LED 3	PLED HOT	14	14	14
15	15	15	AC LED HOT	+5V	16	16	16
17	17	17	SYS GND	KEY	18	18	18
19	19	19	UNUSED	UNUSED	20	20	20

GROUND SHIELD STRAP

TO CHASSIS SCREW ON CORNER OF MOTHER BOARD

GL204

FRONT PANEL

CHASSIS

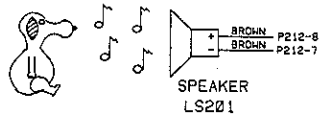

SPEAKER
LS201

T201 TRANSFORMER

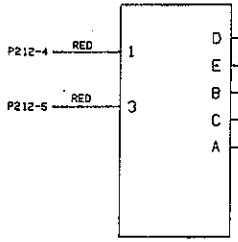

PM101 POWER ENTRY MODULE

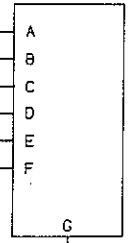

GL202

GREEN/YELLOW

BT201 12V BATTERY

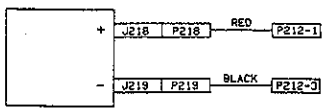

FAN -> 12V,DC BRUSHLESS

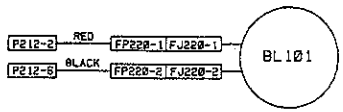

BINDING POST
GL101

GL203

GREEN/YELLOW

REAR PANEL

Q101 3 TERMINAL REGULATOR

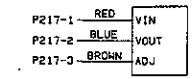

ANALOG IN/OUT J103

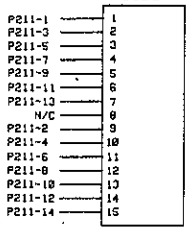

RS-232 OUTPUT 1 J101

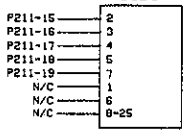

RS-232 OUTPUT 2 J102

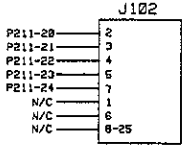

DO NOT SCALE UNLESS STAMPED SPECIFICS DIMENSIONS ARE IN INCHES BREAK ALL SHARP EDGES	TITLE OVERALL WIRING DIAGRAM, MODEL 7000	NOVAMETRIX MEDICAL SYSTEMS INC. WALLINGFORD CT USA 06492			
TOLERANCES	DRAWN 2/MAR 96	CHECKED 05 17/97	SIZE D	DRAWING NO. 5007	REV 09 01
MATERIAL	DATE		SCALE NONE	SHEET 3 OF 3	
FINISH	MODEL 7000				

This document contains information which is proprietary and the property of Novametrix Medical Systems Inc. and may not be reproduced, used or disclosed in whole or in part without the written consent of Novametrix Medical Systems, Inc.

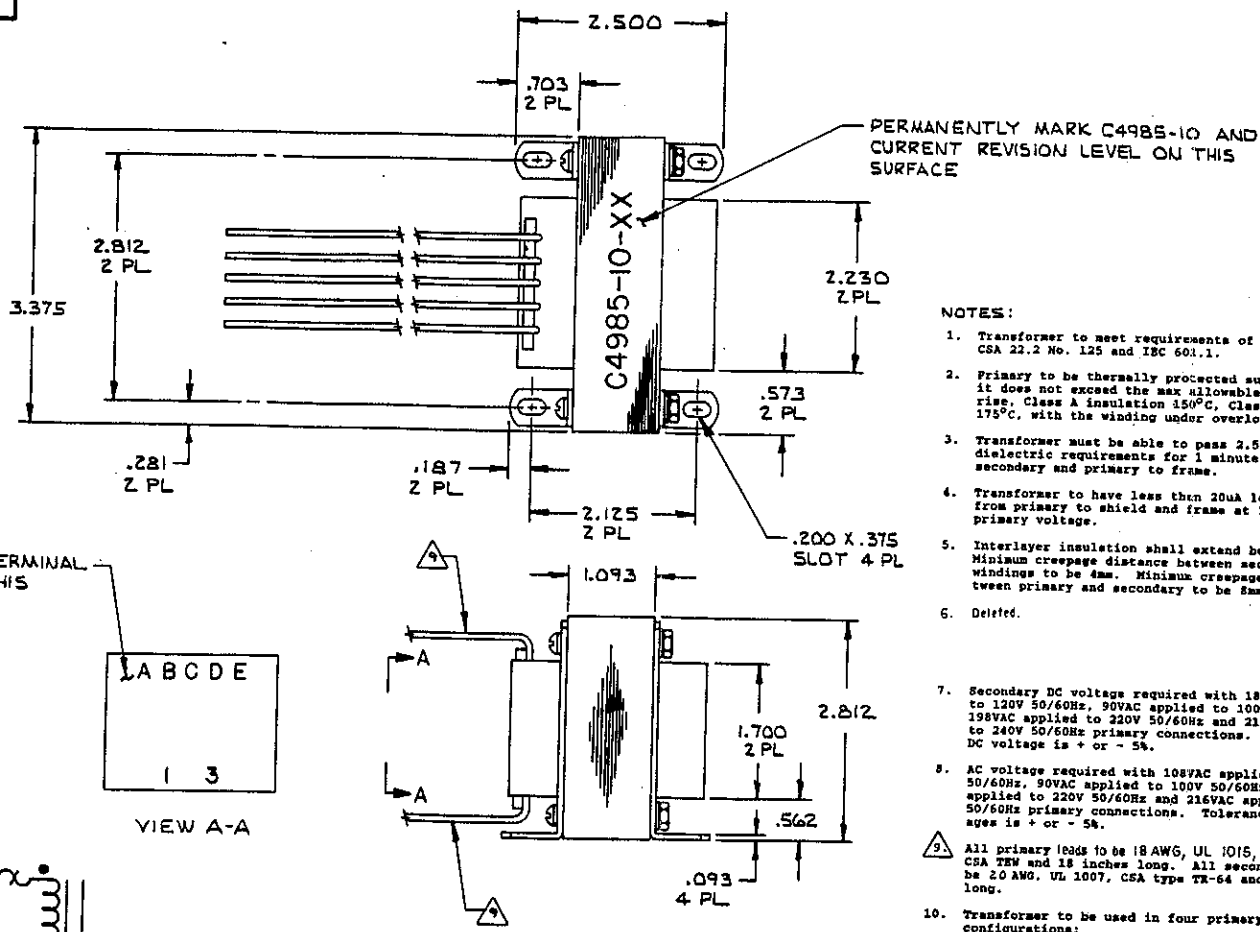

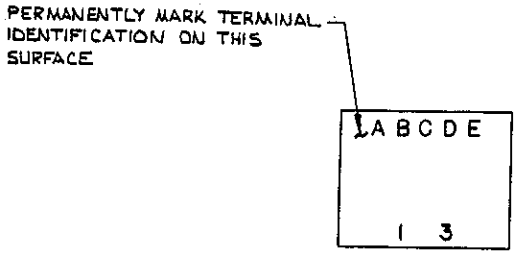

VIEW A-A

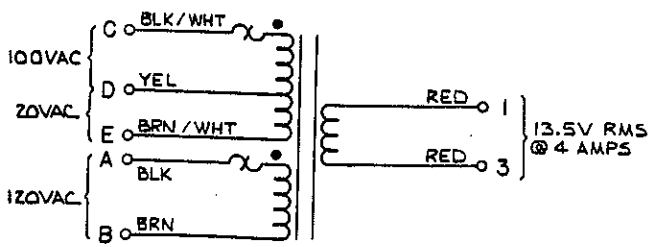

SCHEMATIC DIAGRAM

ECR PENDING

N745

NOTES:

1. Transformer to meet requirements of UL 544, CSA 22.2 No. 125 and IEC 601.1.
2. Primary to be thermally protected such that it does not exceed the max allowable temperature rise, Class A insulation 150°C, Class B insulation 175°C, with the winding under overload condition.
3. Transformer must be able to pass 2.5kV RMS dielectric requirements for 1 minute, primary to secondary and primary to frame.
4. Transformer to have less than 20uA leakage current from primary to shield and frame at 120VAC 60Hz, primary voltage.
5. Interlayer insulation shall extend beyond winding. Minimum creepage distance between secondary windings to be 4mm. Minimum creepage distance between primary and secondary to be 8mm.
6. Deleted.
7. Secondary DC voltage required with 180VAC applied to 120V 50/60Hz, 90VAC applied to 100V 50/60Hz, 198VAC applied to 220V 50/60Hz and 216VAC applied to 240V 50/60Hz primary connections. Tolerances on DC voltage is + or - 5%.
8. AC voltage required with 108VAC applied to 120V 50/60Hz, 90VAC applied to 100V 50/60Hz, 198VAC applied to 220V 50/60Hz and 216VAC applied to 240V 50/60Hz primary connections. Tolerance on AC voltages is + or - 5%.
9. All primary leads to be 18 AWG, UL 1015, CSA TEW and 18 inches long. All secondary leads to be 20 AWG, UL 1007, CSA type TR-64 and 18 inches long.
10. Transformer to be used in four primary configurations:
    A. 100V, terminals C & D
    B. 120V, terminals A & B in parallel with C & E
    C. 220V, terminals A & B in series with C & D
    D. 240V, terminals A & B in series with C & E

REV	"N" NO	BY DATE
01	N104	SM 18 DEC 87

UNLESS OTHERWISE SPECIFIED DIMENSIONS ARE IN INCHES BREAK ALL SHARP EDGES
TOLERANCES: DEC ± .015 FRAC ± ~ HOLES ± .007-.003 ANG ± ~
MATERIAL: ~
FINISH: ~

TITLE: TRANSFORMER, MODEL 1260 & MODEL 7000

DRAWN: MRL 10 JUL 87 | CHKD: GDB 22 JUL 87 | APPROVED: 7-22-87
SCALE: 1/1 | USED ON: 7000 1260

NOVAMETRIX MEDICAL SYSTEMS, INC.
WALLINGFORD, CT U.S.A. 06492

PART NUMBER

SIZE	DRAWING NO	CODE	REV
C	4985	10	01

This document contains information which is proprietary and the property of Novametrix Medical Systems Inc. and may not be reproduced, used or disclosed in whole or in part without the written consent of Novametrix Medical Systems Inc.

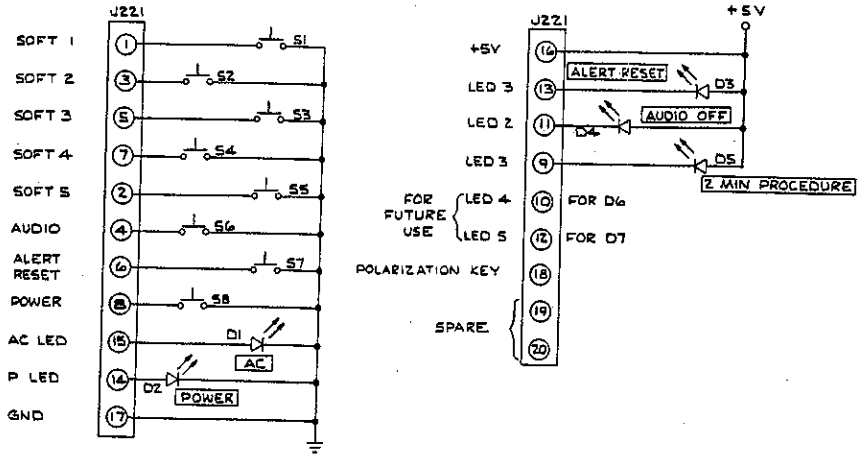

MEMBRANE KEYPANEL, MODEL 7000

NOVAMETRIX MEDICAL SYSTEMS INC.
WALLINGFORD, CT. U.S.A. 06492

SIZE	DRAWING NO.	CODE	REV.
D	4999	27	02

This document contains information which is proprietary and the property of Novametrix Medical Systems Inc. and may not be reproduced, used or disclosed in whole or in part without the written consent of Novametrix Medical Systems Inc.

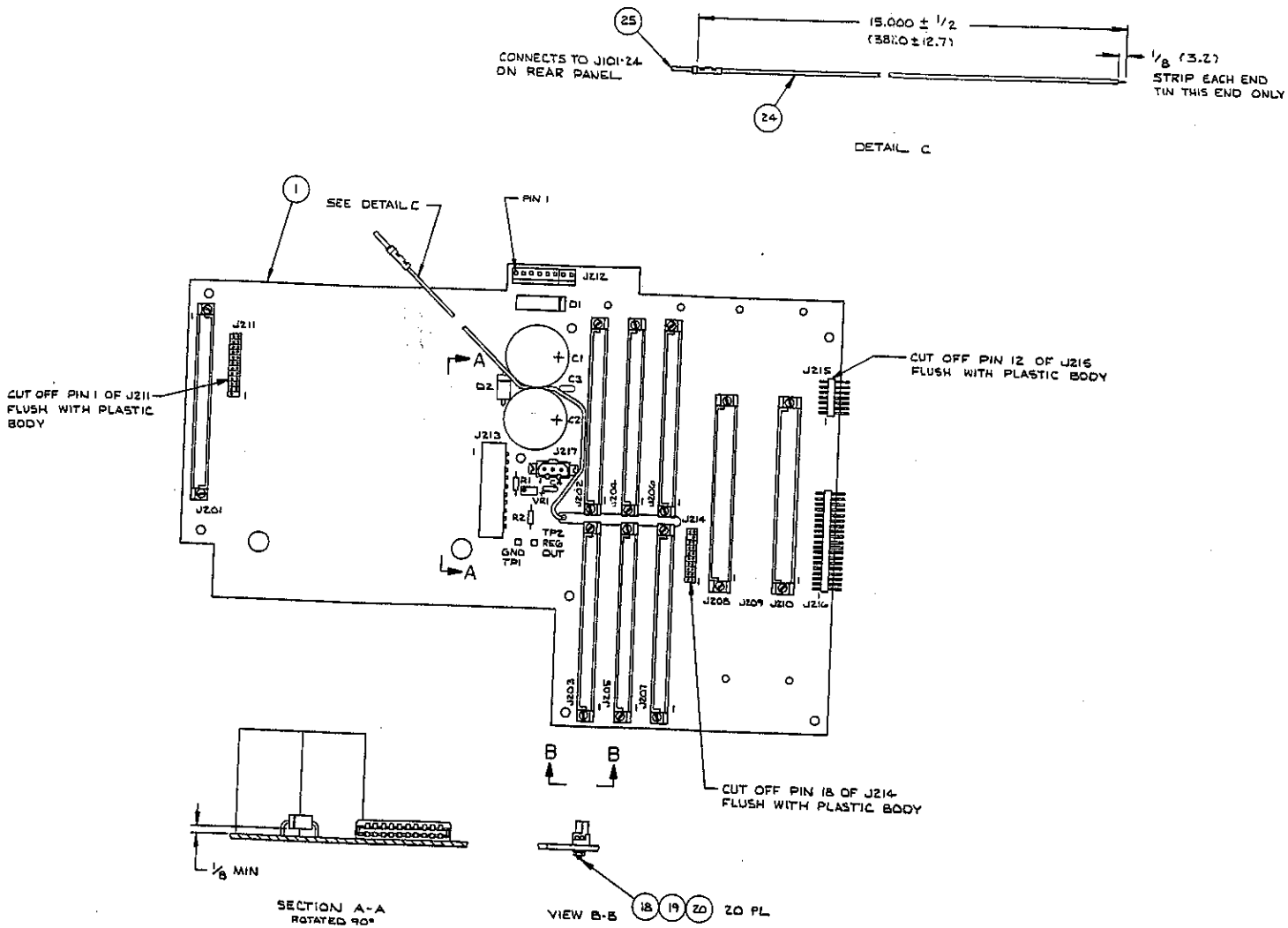

DESCRIPTION	REF DES
CONNECTOR, 10 PIN	J213
96 PIN	J203, J210
64 PIN	J201 - J207
2 PIN	J212
4 PIN	
3 PIN	J217
CONNECTOR, 72 PIN	J211 (24), J214 (20) TRIM TO FIT
CONNECTOR, 14 PIN	J215
CONNECTOR, 38 PIN	J216
CAPACITOR, 1µF	C3
CAPACITOR, 10 000µF, 35V	C1, C2
CAPACITOR, 10µF	C4
RESISTOR, 2KΩ, 1/4W, 1%	R2
RESISTOR, 22Ω, 1/4W, 1%	R1
POTENTIOMETER, 1KΩ	VR1
DIODE, 1N5820	D2
DIODE, BRIDGE RECT, KBU6	D1
TEST POINT	TP1, TP2

ECR PENDING

N683 N713
N705

04	N137		
03	N123		
02	N104		
01	N95		

DO NOT SCALE
UNLESS OTHERWISE SPECIFIED
DIMENSIONS ARE IN MILLIMETERS
EXCEPT ALL DRAFT ANGLES

TOLERANCES
DECIMALS ± .1 mm
MILLIM. REF-DIM
FRAC. ± 1/64

MATERIAL

FINISH

TITLE
MOTHER BOARD ASSY, MODEL 1260

DRAWN M.R. LINDEMAN 19SEP87
CHECKED 22SEP87
APPR. ENGR.
APPR. MGR. 12OCT87

SIZE D
DRAWING NO. 2400
CODE 01
REV 04

SCALE 1/1
SHEET 1 OF 1

NOVAMETRIX
MEDICAL SYSTEMS INC.
WALLINGFORD, CT. U.S.A. 06492

This document contains information which is proprietary and the property of Novametrix Medical Systems Inc. and may not be reproduced, used or disclosed in whole or in part without the written consent of Novametrix Medical Systems Inc.

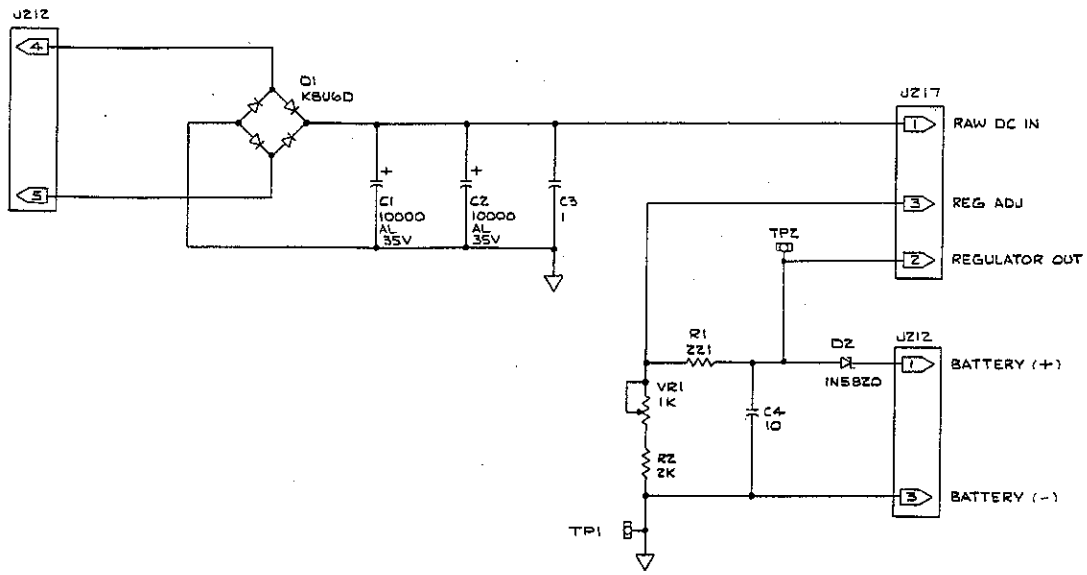

NOTES:

1. UNLESS OTHERWISE SPECIFIED:
   RESISTOR VALUES ARE IN OHMS, 1/4 W, 1%
   CAPACITOR VALUES ARE IN MICROFARADS.
2. LAST REF DES USED: J217, C4, R2, VR1, D2, TP2
3. REF DES NOT USED: J209

ECR PENDING

N713 ____ ____
N735 ____ ____

REV.	"A" NO.	BY DATE
04	N137	GB 15JUN88
03	N123	GB 24MAR88

DO NOT SCALE
UNLESS OTHERWISE SPECIFIED DIMENSIONS ARE IN INCHES UNLESS SHOWN OTHERWISE
TOLERANCES:
DEC. ± ___ HOLES ± .001/.005
FRACT. ± ___ ANGL. ± ___

MATERIAL: —
FINISH: —

TITLE: SCHEMATIC. MOTHER BOARD MODEL 1260

DRAWN: GB 15JUN88
CHECKED:
DATE CHECK:
APPROVED:

USED ON: D2400-01

NOVAMETRIX MEDICAL SYSTEMS INC.
WALLINGFORD, CT. USA 06492

SIZE: D | DRAWING NO.: 2400 | CODE: 03 | REV.: 04

SCALE: — | SHEET 1 OF 2

This document contains information which is proprietary and the property of Novametrix Medical Systems Inc. and may not be reproduced, used or disclosed in whole or in part without the written consent of Novametrix Medical Systems Inc.

BACK PANEL HEADER

P211	J211			J211	P211
1	1	KEY	DAC3	2	2
3	3	DAC1	DAC2	4	4
5	5	SYS GND	SYS GND	6	6
7	7	AGND	AGND	8	8
9	9	A/D 1	A/D 2	10	10
11	11	A/D 3	UNUSED	12	12
13	13	UNUSED	UNUSED	14	14
15	15	DATAIN3	XMITT3	16	16
17	17	RTS3	CTS3	18	18
19	19	COMM GND1	DATA IN4	20	20
21	21	XMITT 4	RTS4	22	22
23	23	CTS4	COMMGND4	24	24

POWER SUPPLY HEADER

P201	J201			J201	P201
A1	A1	SYS GND	SYS GND	B1	B1
A2	A2	SYS GND	SYS GND	B2	B2
A3	A3	SYS GND	SYS GND	B3	B3
A4	A4	RAWDCIN	RAWDCIN	B4	B4
A5	A5	RAWDCIN	RAWDCIN	B5	B5
A6	A6	UNUSED	UNUSED	B6	B6
A7	A7	BATTERY (+)	BATTERY (+)	B7	B7
A8	A8	BATTERY (+)	BATTERY (+)	B8	B8
A9	A9	UNUSED	UNUSED	B9	B9
A10	A10	+5V	+5V	B10	B10
A11	A11	+5V	+5V	B11	B11
A12	A12	+5V	+5V	B12	B12
A13	A13	UNUSED	UNUSED	B13	B13
A14	A14	CRT/FAN +V	CRT/FAN +V	B14	B14
A15	A15	UNUSED	UNUSED	B15	B15
A16	A16	+15V	+15V	B16	B16
A17	A17	+15V	+15V	B17	B17
A18	A18	UNUSED	UNUSED	B18	B18
A19	A19	UNUSED	UNUSED	B19	B19
A20	A20	-15V	-15V	B20	B20
A21	A21	-15V	-15V	B21	B21
A22	A22	UNUSED	UNUSED	B22	B22
A23	A23	UNUSED	UNUSED	B23	B23
A24	A24	POWER SWITCH	UNUSED	B24	B24
A25	A25	PLED HOT	UNUSED	B25	B25
A26	A26	AC LED HOT	UNUSED	B26	B26
A27	A27	UNUSED	UNUSED	B27	B27
A28	A28	UNUSED	BATTERY ON	B28	B28
A29	A29	UNUSED	UNUSED	B29	B29
A30	A30	SYS GND	SYS GND	B30	B30
A31	A31	SYS GND	SYS GND	B31	B31
A32	A32	SYS GND	SYS GND	B32	B32

CRT HEADER

	J213
SYS GND	1
BRIGHTNESS HIGH	2
BRIGHTNESS LOW	3
BRIGHTNESS CENTER	4
UNUSED	5
HSYNC	6
CRT/FAN +V	7
VIDEO	8
VSYNC	9
SYS GND	10

P203	J203	CPU MEMORY BOARD		J203	P203
P205	J205	MAIN CPU BOARD		J205	P205
P207	J207	VIDEO CONTROLLER BOARD		J207	P207
A1	A1	CRT DTACK*	SYS GND	B1	B1
A2	A2	INT*	OE*	B2	B2
A3	A3	ADDR1	SYSTEM RST*	B3	B3
A4	A4	ADDR2	ADDR23	B4	B4
A5	A5	ADDR3	ADDR22	B5	B5
A6	A6	ADDR4	ADDR21	B6	B6
A7	A7	ADDR5	ADDR20	B7	B7
A8	A8	ADDR6	ADDR19	B8	B8
A9	A9	ADDR7	ADDR18	B9	B9
A10	A10	ADDR8	ADDR17	B10	B10
A11	A11	ADDR9	ADDR16	B11	B11
A12	A12	ADDR10	ADDR15	B12	B12
A13	A13	ADDR11	ADDR14	B13	B13
A14	A14	ADDR12	ADDR13	B14	B14
A15	A15	DATA 0	DATA 15	B15	B15
A16	A16	DATA 1	DATA 14	B16	B16
A17	A17	DATA 2	DATA 13	B17	B17
A18	A18	DATA 3	DATA 12	B18	B18
A19	A19	DATA 4	DATA 11	B19	B19
A20	A20	DATA 5	DATA 10	B20	B20
A21	A21	DATA 6	DATA 9	B21	B21
A22	A22	DATA 7	DATA 8	B22	B22
A23	A23	LBRE*	LBWE*	B23	B23
A24	A24	UBRE*	UBWE*	B24	B24
A25	A25	SWITCH 1	SWITCH 5	B25	B25
A26	A26	SWITCH 2	SWITCH 6	B26	B26
A27	A27	SWITCH 3	SWITCH 7	B27	B27
A28	A28	SWITCH 4	UNUSED	B28	B28
A29	A29	LED 1	LED 4	B29	B29
A30	A30	LED 2	LED 5	B30	B30
A31	A31	LED 3	SPARE OUT	B31	B31
A32	A32	R/W*	UNUSED	B32	B32

P202	J202	CPU MEMORY BOARD		J202	P202
P204	J204	MAIN CPU BOARD		J204	P204
P206	J206	VIDEO CONTROLLER BOARD		J206	P206
A1	A1	SYS GND	SYS GND	B1	B1
A2	A2	UNUSED	U4&U5 E*	B2	B2
A3	A3	+5V	U2&U3 E*	B3	B3
A4	A4	CSU1*	+15V	B4	B4
A5	A5	-15V	A/D CS*	B5	B5
A6	A6	CSU2*	BATTERY (+)	B6	B6
A7	A7	CSU3*	CSU4*	B7	B7
A8	A8	INT2*	INT6*	B8	B8
A9	A9	MUX CS*	DTR2	B9	B9
A10	A10	DTR1	CRT INT*	B10	B10
A11	A11	DATA IN1	DATA IN2	B11	B11
A12	A12	XMITT1	XMITT2	B12	B12
A13	A13	CTS1	CTS2	B13	B13
A14	A14	RTS1	RTS2	B14	B14
A15	A15	DATA IN3	DATA IN4	B15	B15
A16	A16	XMITT3	XMITT4	B16	B16
A17	A17	CTS3	CTS4	B17	B17
A18	A18	RTS3	RTS4	B18	B18
A19	A19	COMM GND1	COMM GND2	B19	B19
A20	A20	VIDEO	BRIGHT HIGH	B20	B20
A21	A21	HSYNC	BRIGHT CENTER	B21	B21
A22	A22	VSYNC	BRIGHT LOW	B22	B22
A23	A23	AGND	AGND	B23	B23
A24	A24	A/D 1	A/D 2	B24	B24
A25	A25	A/D 3	DAC 1	B25	B25
A26	A26	DAC 2	DAC 3	B26	B26
A27	A27	I/O 1	BATTERY ON	B27	B27
A28	A28	SPAN SWITCH	WATCHDOG RST*	B28	B28
A29	A29	ZERO SWITCH	I/O 7	B29	B29
A30	A30	I/O 4	I/O 8	B30	B30
A31	A31	SPEAKER (+)	ACRTC CS*	B31	B31
A32	A32	UNUSED	DAC 4	B32	B32

POWER HEADER

	J212	P212	
BATTERY (+)	1	1	BATTERY (+)
CRT/FAN +V	2	2	FAN (+)
SYS GND	3	3	BATTERY (-)
AC IN	4	4	
AC IN	5	5	
SYS GND	6	6	FAN (-)
SYS GND	7	7	SPEAKER (-)
SPEAKER (+)	8	8	SPEAKER (+)

3 TERMINAL REGULATOR HEADER

	J217	P217	
RAW DC	1	1	VIN
REGULATOR OUT	2	2	VOUT
ADJ	3	3	ADJ

MOTHER BOARD GROUND CONNECTIONS

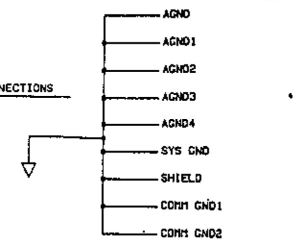

P1	J208	FRONT END BOARD (CTC)		J208	P1
P209	J209	UNUSED		J209	P209
P210	J210	UNUSED		J210	P210
A1	A1	AGND1	UNUSED	B17	B17
A2	A2	DATA OUT	UNUSED	B18	B18
A3	A3	VB DATA	+5V	B19	B19
A4	A4	VB	UNUSED	B20	B20
A5	A5	SIGNAL 10	INT1*	B21	B21
A6	A6	SIGNAL 13	INT2*	B22	B22
A7	A7	AGND2	INT3*	B23	B23
A8	A8	SIGNAL 16	DTR2	B24	B24
A9	A9	SIGNAL 19	DTR1	B25	B25
A10	A10	SIGNAL 22	SYSTEM RST*	B26	B26
A11	A11	SIGNAL 25	A/D 2	B27	B27
A12	A12	HEATER CONTROL	UNUSED	B28	B28
A13	A13	SIGNAL 31	DAC2	B29	B29
A14	A14	UNUSED	I/O 2	B30	B30
A15	A15	UNUSED	BATTERY ON	B31	B31
A16	A16	SHIELD	I/O 8	B32	B32
A17	A17	UNUSED	AGND1	C1	C1
A18	A18	+5V	SIGNAL 3	C2	C2
A19	A19	UNUSED	T2	C3	C3
A20	A20	+15V	HEATER	C4	C4
A21	A21	UNUSED	BOOST	C5	C5
A22	A22	DATA IN1	SOURCE	C6	C6
A23	A23	XMITT1	AGND4	C7	C7
A24	A24	S/H RESET	SIGNAL 18	C8	C8
A25	A25	CTS1	SIGNAL 21	C9	C9
A26	A26	UNUSED	SIGNAL 24	C10	C10
A27	A27	A/D 1	SIGNAL 27	C11	C11
A28	A28	UNUSED	SIGNAL 30	C12	C12
A29	A29	DAC1	SIGNAL 33	C13	C13
A30	A30	I/O 1	UNUSED	C14	C14
A31	A31	I/O 4	UNUSED	C15	C15
A32	A32	I/O 7	SHIELD	C16	C16
B1	B1	AGND1	UNUSED	C17	C17
B2	B2	REF OUT	-15V	C18	C18
B3	B3	VB REF	UNUSED	C19	C19
B4	B4	SIGNAL 8	RAW DC	C20	C20
B5	B5	SIGNAL 11	UNUSED	C21	C21
B6	B6	SIGNAL 14	DATA IN2	C22	C22
B7	B7	AGND3	XMITT2	C23	C23
B8	B8	SIGNAL 17	RTS2	C24	C24
B9	B9	SIGNAL 20	CTS2	C25	C25
B10	B10	SIGNAL 23	UNUSED	C26	C26
B11	B11	SIGNAL 26	A/D 3	C27	C27
B12	B12	SIGNAL 29	UNUSED	C28	C28
B13	B13	SIGNAL 32	DAC3	C29	C29
B14	B14	UNUSED	I/O 3	C30	C30
B15	B15	UNUSED	I/O 6	C31	C31
B16	B16	SHIELD	I/O 9	C32	C32

TRANSDUCER HEADER

P216	J216			J216	P216
1	1	DATA OUT	SIGNAL 16	2	2
3	3	REF OUT	SIGNAL 17	4	4
5	5	SIGNAL 3	SIGNAL 18	6	6
7	7	VB DATA	SIGNAL 19	8	8
9	9	VB REF	SIGNAL 20	10	10
11	11	T2	SIGNAL 21	12	12
13	13	VB	SIGNAL 22	14	14
15	15	SIGNAL 8	SIGNAL 23	16	16
17	17	HEATER	SIGNAL 24	18	18
19	19	SIGNAL 10	SIGNAL 25	20	20
21	21	SIGNAL 11	SIGNAL 26	22	22
23	23	BOOST	SIGNAL 27	24	24
25	25	SIGNAL 13	HEATERCONTROL	26	26
27	27	SIGNAL 14	SIGNAL 29	28	28
29	29	SOURCE	SHIELD	30	30
31	31	AGND 1	AGND 2	32	32
33	33	AGND 3	AGND 4	34	34
35	35	+5V	-15V	36	36
37	37	+15V	-15V	38	38

CAL CELL HEADER

P215	J215			J215	P215
1	1	I/O 1	UNUSED	2	2
3	3	SPAN SWITCH	I/O 6	4	4
5	5	ZERO SWITCH	I/O 7	6	6
7	7	I/O 4	SYS GND	8	8
9	9	+5V	-15V	10	10
11	11	+15V	KEY	12	12
13	13	UNUSED	UNUSED	14	14

FRONT PANEL HEADER

	P221	P214	J214			J214	P214	P221
	1	1	1	SWITCH 1	SWITCH 5	2	2	2
	3	3	3	SWITCH 2	SWITCH 6	4	4	4
	5	5	5	SWITCH 3	SWITCH 7	6	6	6
	7	7	7	SWITCH 4	POWER SWITCH	8	8	8
(2 MIN)	9	9	9	LED 1	LED 4	10	10	10
(AUDIO OFF)	11	11	11	LED 2	LED 5	12	12	12
(ALERT RESET)	13	13	13	LED 3	PLED HOT	14	14	14
	15	15	15	AC LED HOT	+5V	16	16	16
	17	17	17	SYS GND	KEY	18	18	18
	19	19	19	UNUSED	UNUSED	20	20	20

ECR PENDING

N713 N735

MOTHER BOARD

SCHEMATIC, MOTHER BOARD MODEL 1260

NOVAMETRIX MEDICAL SYSTEMS INC. WALLINGFORD, CT. U.S.A. 06492

D 2400 03 04

Q2400-01

SCALE NONE

This document contains information which is proprietary and the property of Novametrix Medical Systems Inc. and may not be reproduced, used or disclosed in whole or in part without the written consent of Novametrix Medical Systems Inc.

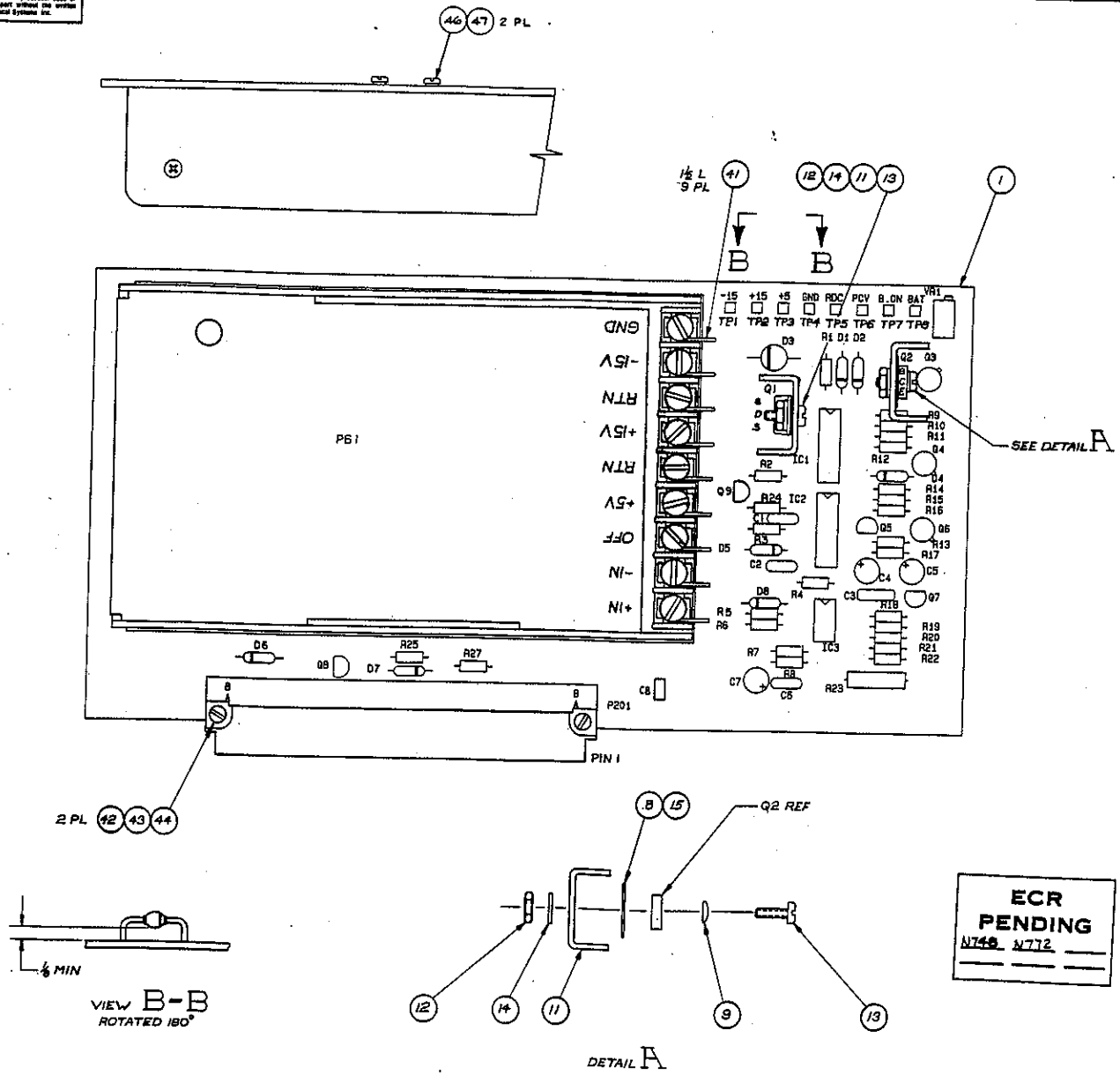

DESCRIPTION	REF. DES
CAPACITOR, 10µf, 25V	C4, C5, C7
CAPACITOR, 1µf	C1, C2, C6.
CAPACITOR, .01µf, 50V	C3
CAPACITOR, .1µf	C8
RESISTOR, 390Ω, 1/4W, 10%	R25
1KΩ 1%	R3, R21
5.11KΩ	R2, R10, R12-R14, R16, R18, R22
24.9KΩ	R4, R9, R11, R15
27.4 KΩ	R6
49.9KΩ	R1, R17
200 KΩ	R7, R19
301KΩ	R5
1MΩ	R8
150Ω, 1/4W, 1%	R20
RESISTOR, 100Ω, 1W, 5%	R23
POTENTIOMETER, 500KΩ	VR1
DIODE, 1N5624	D3
DIODE, 1N4001	D1, D2, D4
DIODE, ZENER, 1N5351	D5
TRANSISTOR, 2N2907A	Q3
2N3906	Q5, Q7, Q8
2N2222A	Q4, Q6
TRANSISTOR, MJE 371	Q2
FET, IRF9530	Q1
IC, CD4013B	IC2
IC, MC4081B	IC1
IC, ICL7665	IC3
CONNECTOR, 64 PIN	P201
POWER SUPPLY, 12V	PS1
TEST POINT	TP1-TP8
DIODE, 1N4148	D6-D8
RESISTOR, 560Ω, 1/4W, 10%	R27
RESISTOR, 820KΩ, 1/4W, 1%	R24
TRANSISTOR, 2N3904	Q9

ECR PENDING
N748 N772

01	N123		

POWER SUPPLY BOARD ASSY, MODEL 1260

NOVAMETRIX MEDICAL SYSTEMS INC. WALLINGFORD, CT. U.S.A. 06492

D 2401 01 00

SCALE 2/1 SHEET 1 OF 1

This document contains information which is proprietary and the property of Novametrix Medical Systems Inc. and may not be reproduced, used or disclosed in whole or in part without the written consent of Novametrix Medical Systems Inc.

NOTES: 1. LAST REF DES USED: C8, D8, IC3, P201, PS1, Q9, R27, TP8, VR1
2. UNLESS OTHERWISE SPECIFIED: RESISTANCE VALUES ARE IN OHMS, 1/4 W, 1%
3. NOT USED: R26

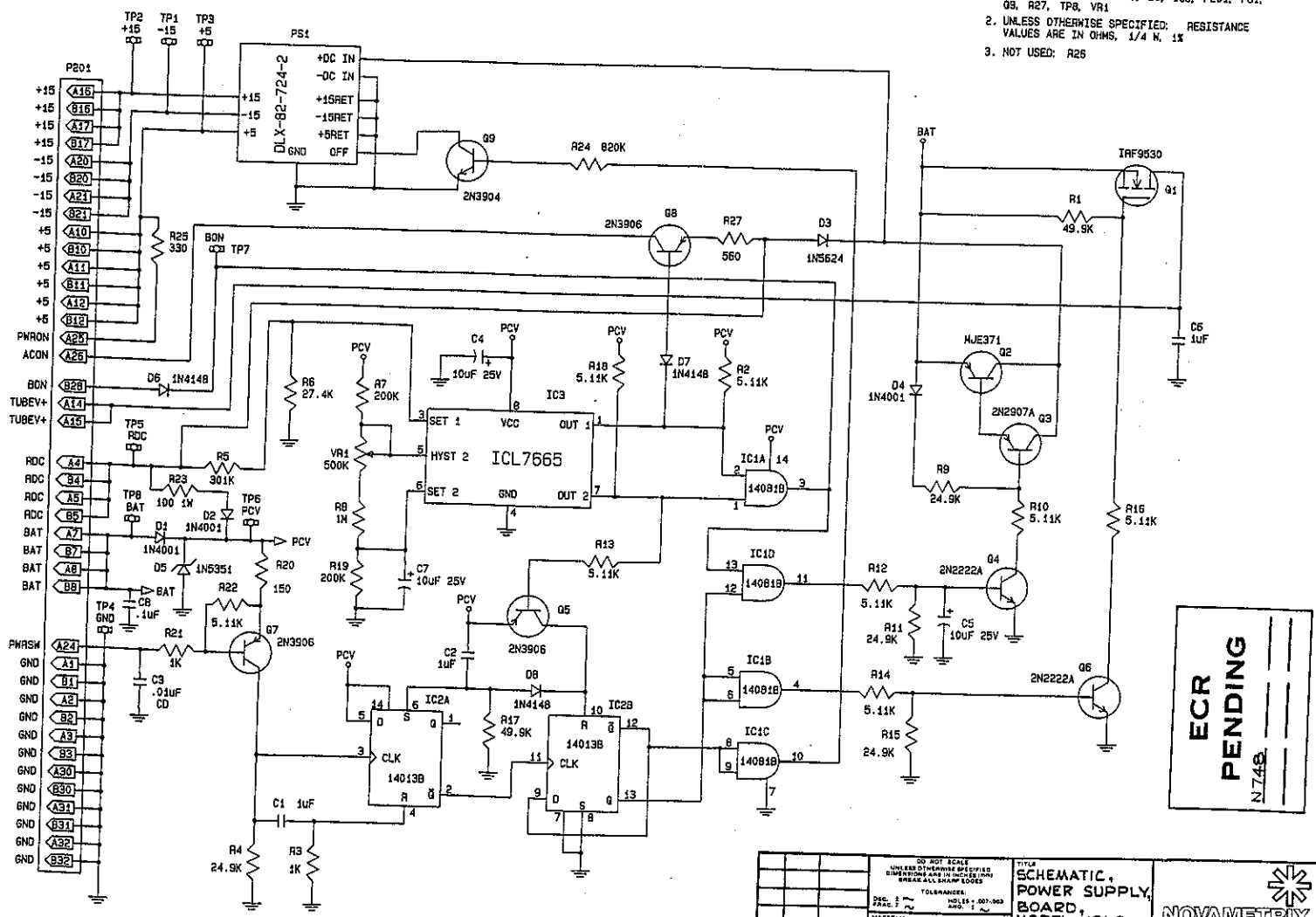

REV.	"R" NO.	BY DATE
01	M122	GB 18MAR 88

DO NOT SCALE
UNLESS OTHERWISE SPECIFIED DIMENSIONS ARE IN INCHES (MM)
BREAK ALL SHARP EDGES
TOLERANCES:
DEC. ± ~ FRAC. ± ~ HOLES +.007-.003 ANG. ± ~
MATERIAL: ~
FINISH: ~

TITLE: SCHEMATIC, POWER SUPPLY, BOARD, MODEL 1260

DRAWN DS 18MAR'88 | CHECKED 5-10-88 | MFG. ENGR. DW | APPROVED | USED ON 02401-01

NOVAMETRIX MEDICAL SYSTEMS INC.
WALLINGFORD, CT. U.S.A. 06492

SIZE	DRAWING NO.	CODE	REV.
C	2401	03	01

SCALE ~ SHEET 1 OF 1

MILFORD BLUEPRINT INC.

This document contains information which is proprietary and the property of Novametrix Medical Systems Inc. and may not be reproduced, used or disclosed in whole or in part without the written consent of Novametrix Medical Systems Inc.

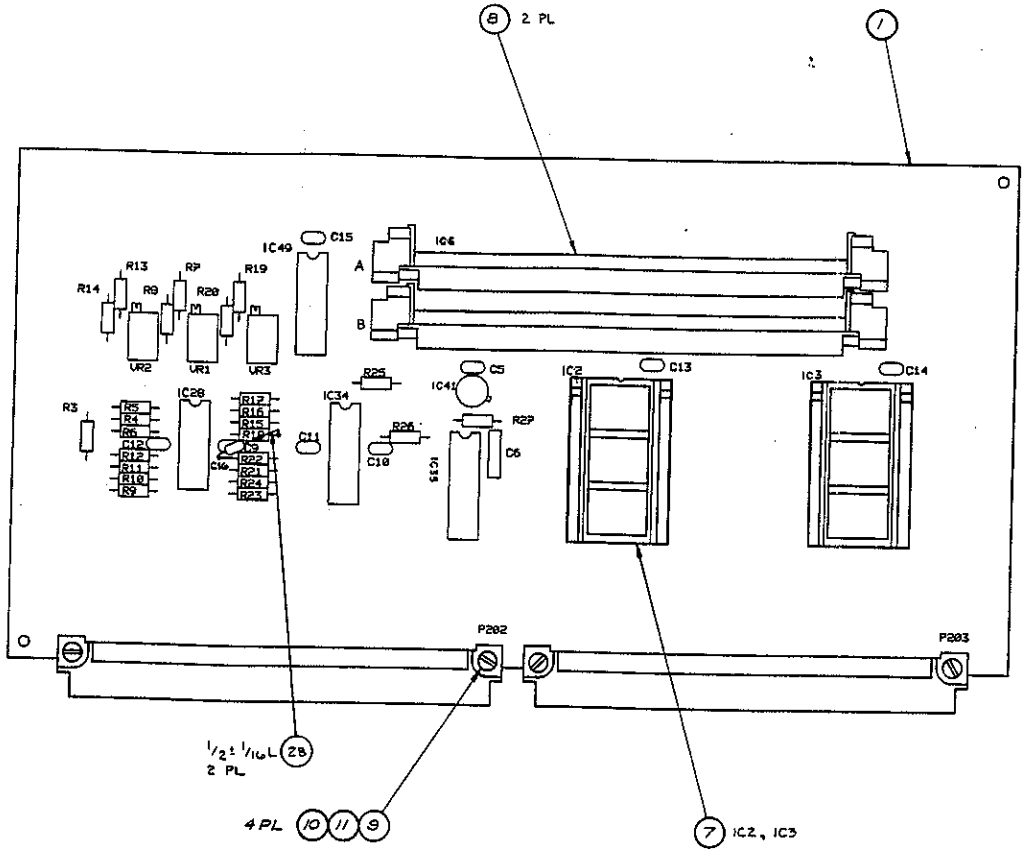

DESCRIPTION	REF DES.
CAPACITOR, 100pf, 500V	C6
CAPACITOR, 0.1µf, 50V	C5
CAPACITOR, 1µf, 16V	C9-C16
RESISTOR, 1KΩ, 1/4W, 10%	R26
6.81KΩ 1%	R6, R12, R18
10KΩ	R5, R11, R17, R23
20KΩ	R3, R4, R9, R10, R15, R16
64.9KΩ	R24
121KΩ	R27
55.2KΩ	R8, R14, R20
27.4KΩ	R7, R13, R19
RESISTOR, 1.21KΩ, 1/4W, 1%	R25
RESISTOR, 1MΩ, 1/4W, 1%	R21, R22
POTENTIOMETER, 20KΩ	VR1-VR3
CONNECTOR, 64 PIN	P202, P203
IC, DG212CJ	IC34
74HCT173	IC49
MP7574	IC35
TL074CN	IC28
IC, AD584JH	IC41

2nd
ECR PENDING
N772

REV		BY	DATE
03	N137		
02	N123		
01	N104		

TITLE: CPU MEMORY BOARD ASSEMBLY, MODEL 1260

NOVAMETRIX MEDICAL SYSTEMS INC.
WALLINGFORD, CT. USA 06492

D 2402 01 03

SCALE 2/1 SHEET 1 OF 1

This document contains information which is proprietary and the property of Novametrix Medical Systems Inc. and may not be reproduced, used or disclosed in whole or in part without the written consent of Novametrix Medical Systems Inc.

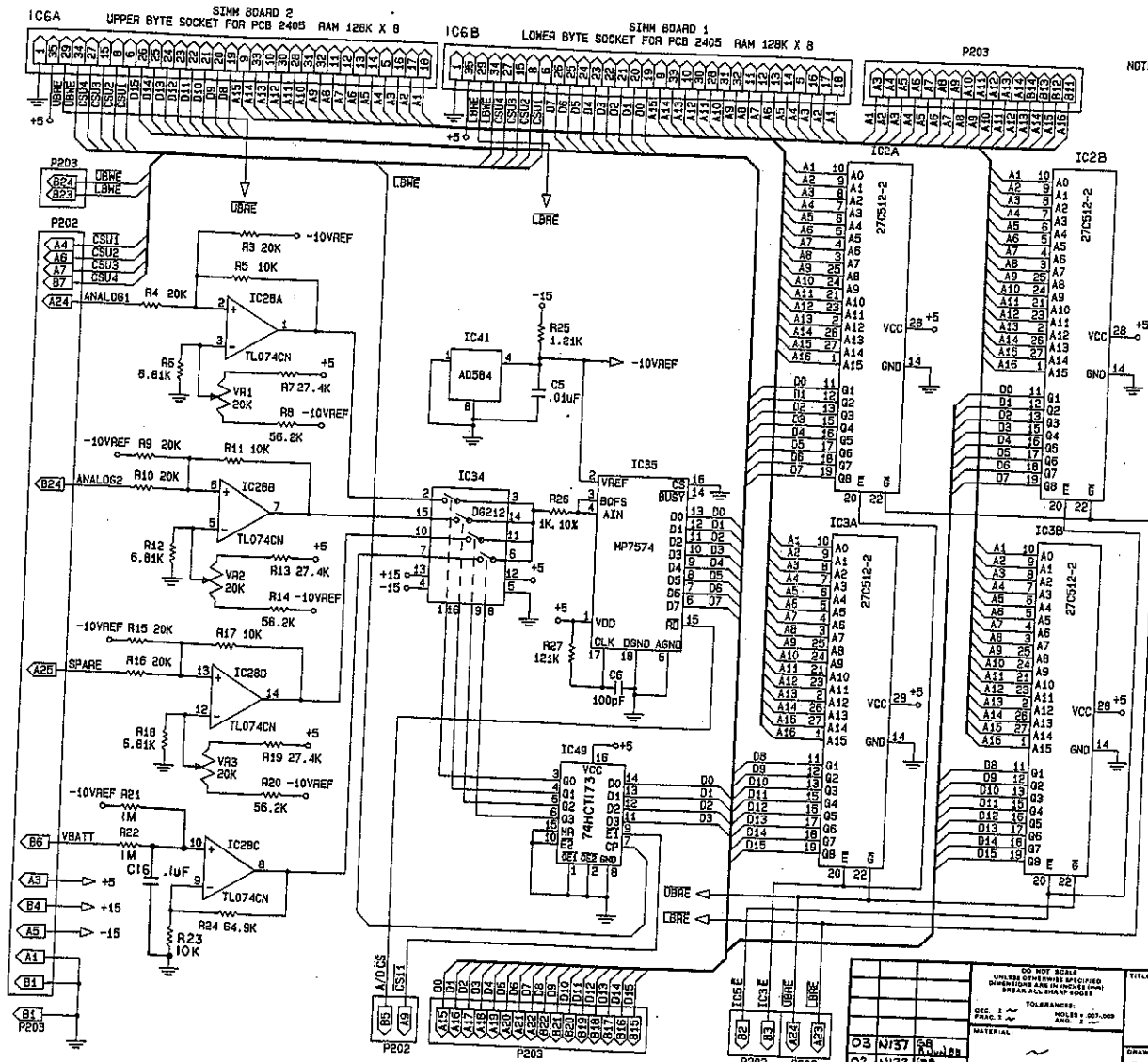

NOTES:
1. UNLESS OTHERWISE SPECIFIED: RESISTANCE VALUES ARE IN OHMS, 1/4 W, 1%
2. LAST REF DES USED: C16, IC49, R27, VR3.
3. NOT USED: C1-C4, C7, C8, IC1, IC6-IC27, IC29-IC33, IC36-IC40, IC42-IC48, R1, R2

REF DES	TYPE NUMBER	POWER VCC	POWER GND	CAP .1uF
IC2	27C512-20	28	14	C13
IC3	27C512-20	28	14	C14
IC4	27C512-20	28	14	C13
IC5	27C512-20	28	14	C14
IC28	TL074CN			
	+15	4		C12
	-15	11		C9
IC34	DG212CJ	12	5	
	+15	13		C10
	-15	4		C11
IC35	MP7574	1	5	
IC41	AD584JH			
IC49	74HCT173	16	8	C15

ECR PENDING

N736

REV.	"R" NO.	BY DATE
03	N137	GB 8 JUN 88
02	N123	GB 17 MAR 88
01	N104	SM 2 DEC 87

DO NOT SCALE UNLESS OTHERWISE SPECIFIED DIMENSIONS ARE IN INCHES (mm) BREAK ALL SHARP EDGES
TOLERANCES: DEC. ± FRAC. ± HOLES ± .007 ANG. ±

MATERIAL: ~
FINISH: ~

TITLE: SCHEMATIC, CPU MEMORY BOARD MODEL 1260

DRAWN SM 12 JAN 88
CHECKED
MFG. ENGR.
APPROVED 12-7-87
USED ON D2402-01

NOVAMETRIX MEDICAL SYSTEMS INC.
WALLINGFORD, CT. USA 06492

SIZE C | DRAWING NO. 2402 | CODE 03 | REV. 03
SCALE — | SHEET 1 OF 1

MILFORD BLUEPRINT INC.

This document contains information which is proprietary and the property of Novametrix Medical Systems Inc. and may not be reproduced, used or disclosed in whole or in part without the written consent of Novametrix Medical Systems Inc.

NOTES:
1. THE FOLLOWING COMPONENTS ARE NOT USED C15, C63, R42, IC47, C23

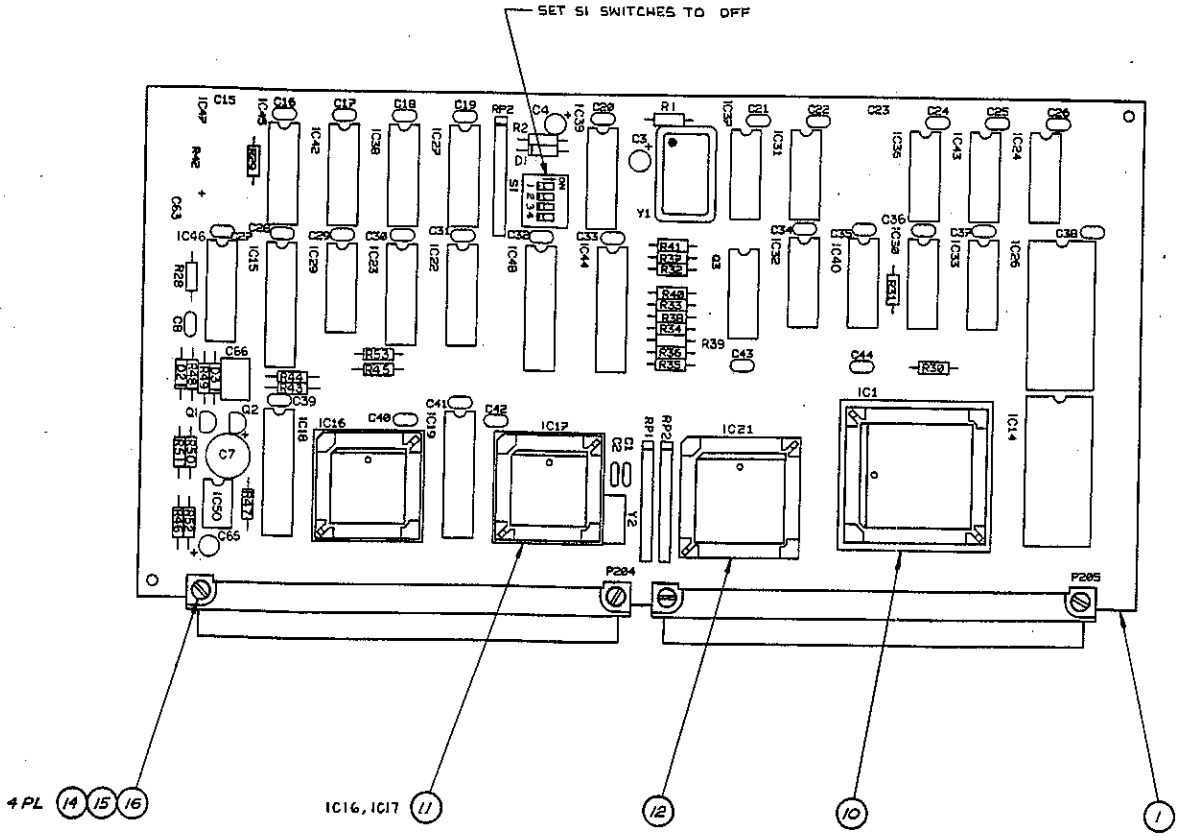

DESCRIPTION	REF DES
CAPACITOR, 10µF, 25V	C3, C4, C65
100µF, 10V	C7
68pF, 500V	C66
.1µF	C8, C16-C22, C24-C44
CAPACITOR, 20pF	C1, C2
DIODE, IN4148	D1, D2, D3
RESISTOR, 100KΩ, ¼W, 10%	R1, R2.
10Ω 1%	R28, R50
499Ω	R37-R41
3.32KΩ	R29, R32-R36
10KΩ	R30, R31
5.11KΩ	R51
475K Ω	R49
200K Ω	R48
49.9 Ω	R46
100K Ω	R47
24.9K Ω, ¼W, 1%	R52
RESISTOR, 5.6K Ω, ¼W, 10%	R43-R45, R53
RESISTOR PACK 10K Ω	RP1-RP3
IC, TLC272CP	IC50
IC, MAX233	IC18, IC19
AD7226KN	IC15
MX0555GA-2C-16	Y1
MK68230Q-8	IC21
R68C55P3	IC16, IC17
MK48T02B-15	IC14
HD68HC000CP-8	IC1
74F139	IC22
74F138	IC23
74F32	IC24, IC31-IC33
74F244	IC48
74F08	IC29, IC30
74F04	IC36
74F74	IC37
74F00	IC43
74F161A	IC38, IC45
74HCT281	IC39
74F10	IC40
74F374	IC44
74F173	IC42
74F148	IC27
SN76496N	IC46
IC, 74LS154N	IC26
TRANSISTOR, 2N3906	Q2
TRANSISTOR, 2N3904	Q1
TRANSISTOR ARRAY, CA3046E	Q3
CRYSTAL, 3.6864 MHz	Y2
CONNECTOR, 64 PIN	P204, P205
SWITCH, 4 POSITION	S1

ECR PENDING
N772 N792

03	N123	
02	N104	
01	N104	

DO NOT SCALE
UNLESS OTHERWISE SPECIFIED DIMENSIONS ARE IN INCHES
TOLERANCES
FRACTIONS ± 1/64
DECIMALS ± .01
ANGLES ± 1°
MATERIAL ~
FINISH ~

TITLE
MAIN CPU BOARD ASSY, MODEL 1260

DRAWN BY C. SEKELLI 21 SEP 87
CHECKED BY 13 SEP 87
APPROVED BY
MFG ENGR. BW
ENGINEER KG 1-29-88
USED ON 1260

NOVAMETRIX MEDICAL SYSTEMS INC.
WALLINGFORD, CT. U.S.A. 06492

SIZE	DOCUMENT NO.	CODE	REV.
D	2403	01	02

SCALE 2/1 SHEET 1 OF 7

This document contains information which is proprietary and the property of Novametrix Medical Systems Inc. and may not be reproduced, used or disclosed in whole or in part without the written consent of Novametrix Medical Systems Inc.

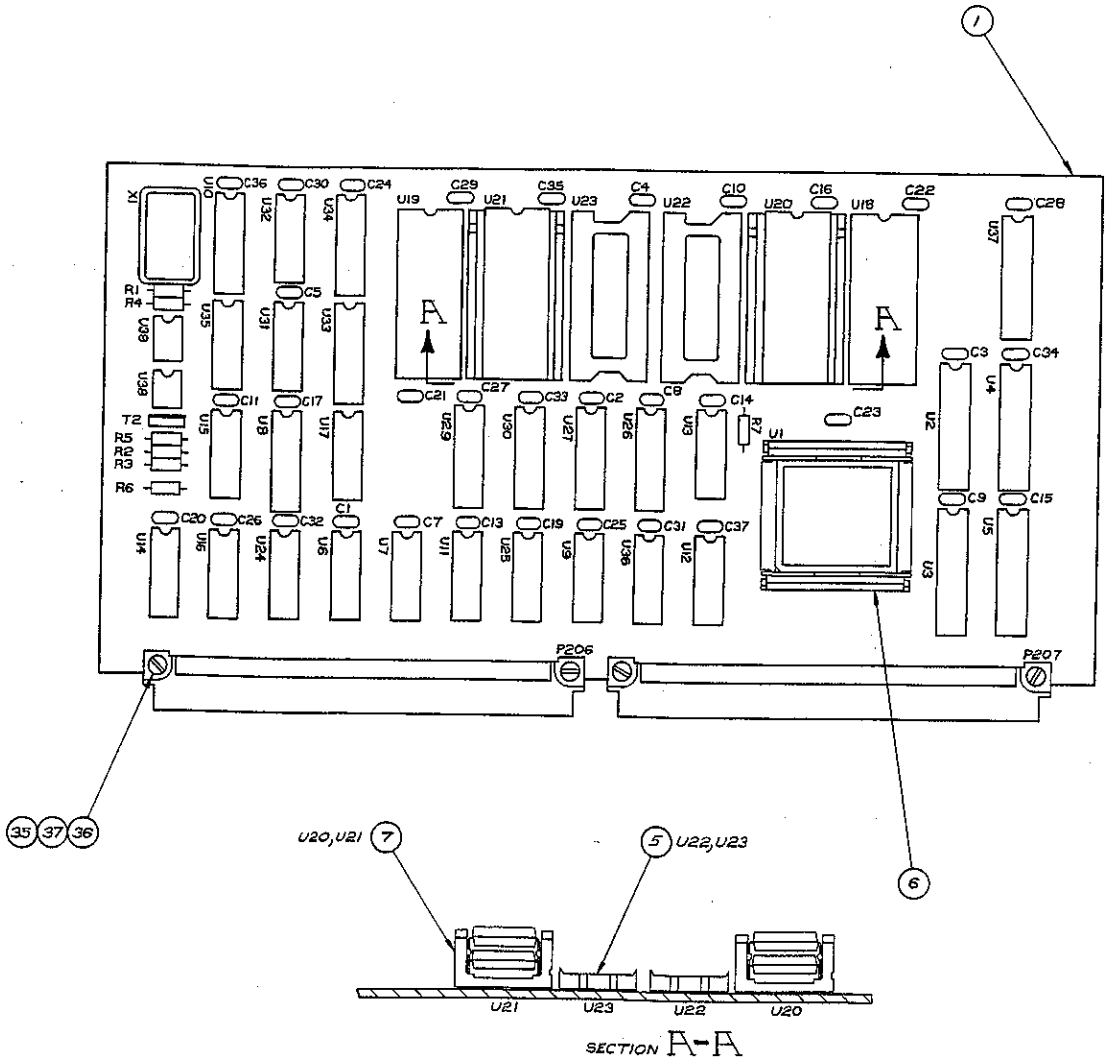

DESCRIPTION	REF DES
CAPACITOR, .1µF	C1-C5, C7-C11, C13-C17 C19-C37
RESISTOR, 1KΩ, ¼W, 1%	R1, R4, R6
10KΩ	R7
49.9KΩ	R5
100KΩ	R3
RESISTOR, 1MΩ, ¼W, 1%	R2
IC, HD63484-8	U1
MX055GA-2C-20	X1
74F138	U8
74F32	U16, U36
74F08	U6, U7
74F04	U24, U25, U35
74F74	U9
74F00	U11, U12
74F10	U13, U14
74F374	U4, U5
74F373	U2, U3
74F163A	U10
74F11	U15
74F27	U17
74F166	U26, U27, U29, U30
74F164	U31, U32
74F151	U33, U34
74F273	U37
TLC271CP	U39
4N38A	U38
IC, HM62256LP-15	U18, U19, U20(2), U21(2)
CONNECTOR, 64 PIN	P206, P207
TRANSISTOR, 2N4919	T2

ECR PENDING

N772

REV.	"N" NO.	REMARKS
02	N123	DCN 01 MAR 88
01	N95	DCN 01 OCT 87

DO NOT SCALE
UNLESS OTHERWISE SPECIFIED DIMENSIONS ARE IN INCHES (MM) SHEAR ALL SHARP EDGES
TOLERANCES:
DEC. ± .1 (2.5)
FRACT. ± 1/64 (0.4)
ANGLE ± 1°
HOLES: ± .005 (.13)
ARB: ± .2 (5)

MATERIAL: ~

FINISH: ~

TITLE: VIDEO CONTROLLER BOARD ASSY MODEL 1260

DRAWN: J. CITTERELLI 17 SEP 87
CHECKED: ANN LUMBERA 17 SEP 87
APPROVED: B.W. 10 SEP 87
USED ON: 1260

NOVAMETRIX MEDICAL SYSTEMS INC.
WALLINGFORD, CT. U.S.A. 06492

SIZE: D | DRAWING NO.: 2404 | CODE: 01 | REV: 02

SCALE: 2/1 | SHEET 1 OF 1

This document contains information which is proprietary and the property of Novametrix Medical Systems Inc. and may not be reproduced, used or disclosed in whole or in part without the written consent of Novametrix Medical Systems Inc.

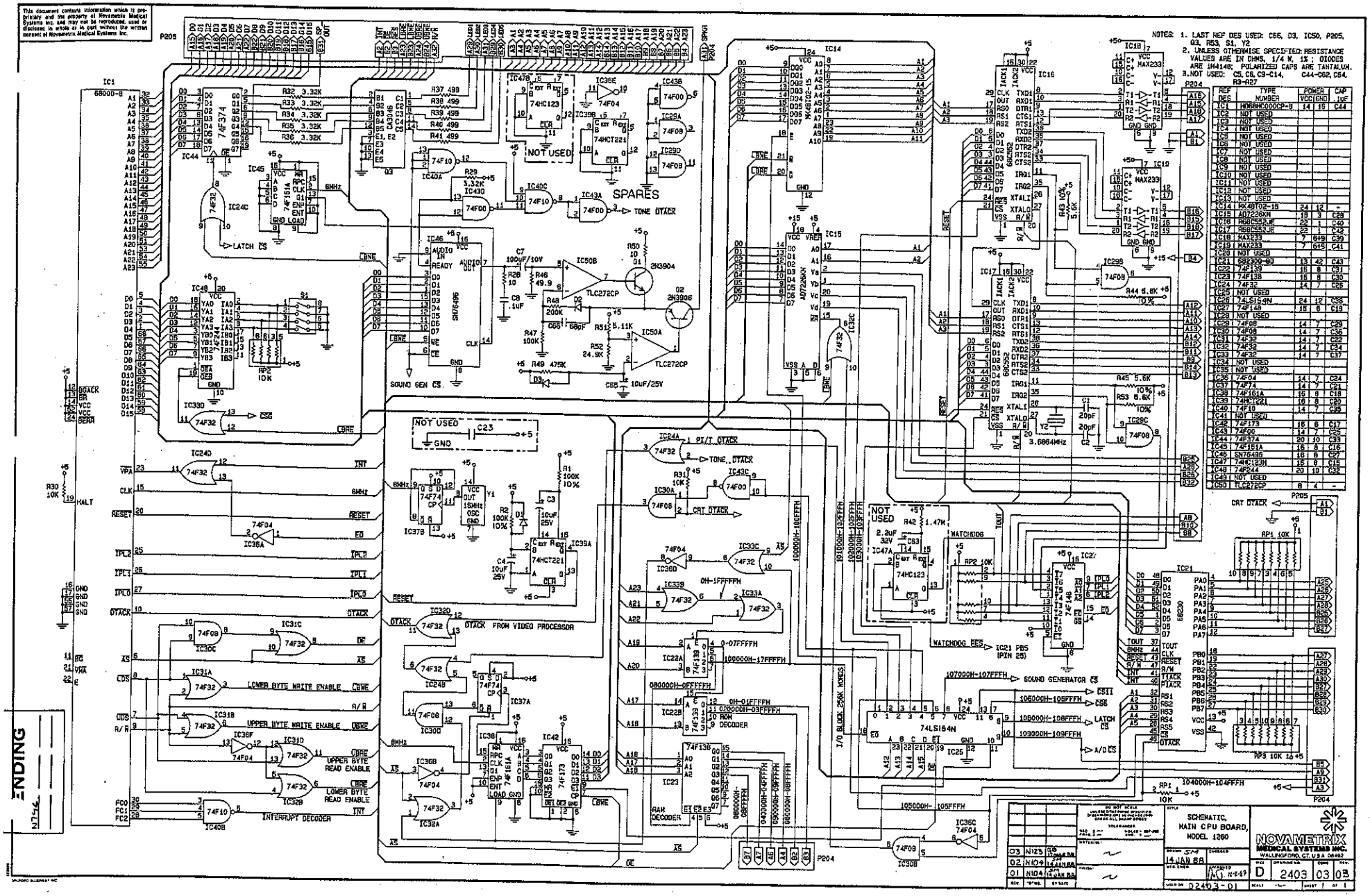

NOTES: 1. LAST REF DES USED: C66, D3, IC50, P205, Q3, R53, S1, Y2
2. UNLESS OTHERWISE SPECIFIED: RESISTANCE VALUES ARE IN OHMS, 1/4 W, 1% ; DIODES ARE 1N4148; POLARIZED CAPS ARE TANTALUM.
3. NOT USED: C5, C6, C9-C14, C44-C62, C64, R3-R27

REF DES	TYPE NUMBER	POWER VCC	POWER GND	CAP .1uF
IC1	HD68HC000CP-8	14	16	C44
IC2	NOT USED			
IC3	NOT USED			
IC4	NOT USED			
IC5	NOT USED			
IC6	NOT USED			
IC7	NOT USED			
IC8	NOT USED			
IC9	NOT USED			
IC10	NOT USED			
IC11	NOT USED			
IC12	NOT USED			
IC13	NOT USED			
IC14	MK48T02-15	24	12	-
IC15	AD7226KN	18	3	C28
IC16	R68C552JE	22	1	C40
IC17	R68C552JE	22	1	C42
IC18	MAX233	7	6+9	C39
IC19	MAX233	7	6+9	C41
IC20	NOT USED			
IC21	68230-8D	13	42	C43
IC22	74F139	16	8	C31
IC23	74F138	16	8	C30
IC24	74F32	14	7	C26
IC25	NOT USED			
IC26	74LS154N	24	12	C38
IC27	74F148	16	8	C19
IC28	NOT USED			
IC29	74F08	14	7	C29
IC30	74F08	14	7	C36
IC31	74F32	14	7	C22
IC32	74F32	14	7	C34
IC33	74F32	14	7	C37
IC34	NOT USED			
IC35	NOT USED			
IC36	74F04	14	7	C24
IC37	74F74	14	7	C21
IC38	74F161A	16	8	C18
IC39	74HCT221	16	8	C20
IC40	74F10	14	7	C35
IC41	NOT USED			
IC42	74F173	16	8	C17
IC43	74F00	14	7	C25
IC44	74F374	20	10	C33
IC45	74F161A	16	8	C16
IC46	SN76496	16	8	C27
IC47	74HC123N	16	8	C15
IC48	74F244	20	10	C32
IC49	NOT USED			
IC50	TLC272CP	8	4	-

REV.	"S" NO.	BY DATE
03	N123	GB 17 MAR 88
02	N104	SM 14 JAN 88
01	N104	SM 14 JAN 88

DO NOT SCALE UNLESS OTHERWISE SPECIFIED DIMENSIONS ARE IN INCHES FROM BREAK ALL SHARP EDGES

TOLERANCES: DEC. ± 1/32, FRACT. ± 1/64, ANGLES ± 1/2°

MATERIAL: ~

FINISH: ~

TITLE: SCHEMATIC, MAIN CPU BOARD, MODEL 1260

DRAWN: SM 14 JAN 88

CHECKED: MJ 14-1-87

NOVAMETRIX MEDICAL SYSTEMS INC. WALLINGFORD, CT. U.S.A. 06492

SIZE: D | DRAWING NO.: 2403 | CODE: 03 | REV.: 03

USED ON: D2403-01

SCALE: ~ | SHEET 1 OF 1

This document contains information which is proprietary and the property of Novametrix Medical Systems Inc. and may not be reproduced, used or disclosed in whole or in part without the written consent of Novametrix Medical Systems Inc.

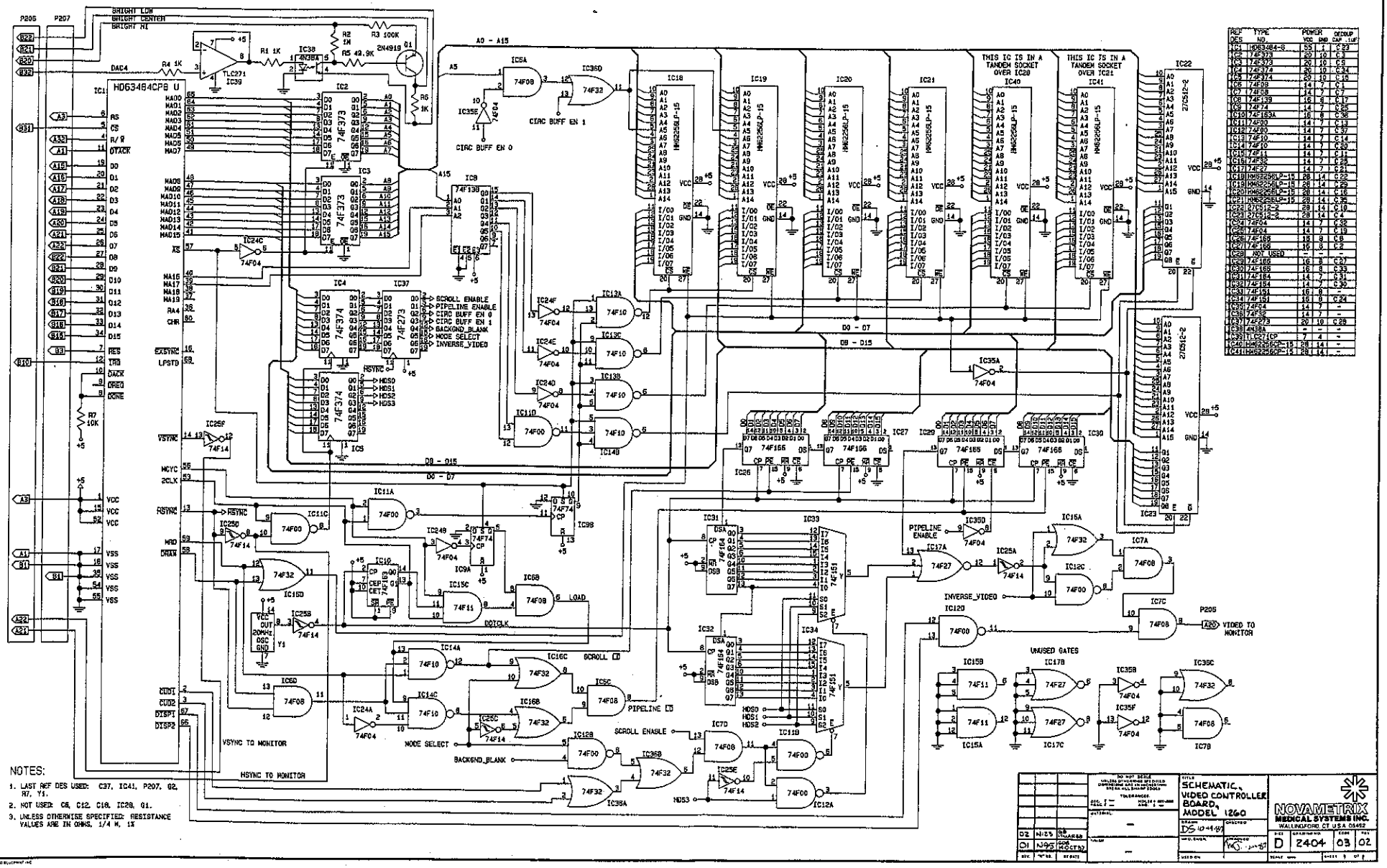

REF DES	TYPE NO.	POWER VCC	POWER GND	DECOUP CAP	DECOUP .1uF
IC1	HD63484-8	55	1	C23	
IC2	74F373	20	10	C3	
IC3	74F373	20	10	C5	
IC4	74F374	20	10	C34	
IC5	74F374	20	10	C15	
IC6	74F09	14	7	C1	
IC7	74F08	14	7	C7	
IC8	74F139	16	8	C17	
IC9	74F14	14	7	C25	
IC10	74F163A	16	8	C36	
IC11	74F00	14	7	C13	
IC12	74F00	14	7	C37	
IC13	74F10	14	7	C14	
IC14	74F10	14	7	C20	
IC15	74F11	14	7	C11	
IC16	74F32	14	7	C26	
IC17	74F27	14	7	C21	
IC18	HM62256LP-15	28	14	C22	
IC19	HM62256LP-15	28	14	C29	
IC20	HM62256LP-15	28	14	C16	
IC21	HM62256LP-15	28	14	C35	
IC22	27C512-2	28	14	C10	
IC23	27C512-2	28	14	C4	
IC24	74F04	14	7	C32	
IC25	74F04	14	7	C19	
IC26	74F166	16	8	C8	
IC27	74F166	16	8	C2	
IC28	NOT USED	-	-	-	
IC29	74F166	16	8	C27	
IC30	74F166	16	8	C33	
IC31	74F164	14	7	C31	
IC32	74F164	14	7	C30	
IC33	74F151	16	8	-	
IC34	74F151	16	8	C24	
IC35	74F04	14	7	-	
IC36	74F32	14	7	-	
IC37	74F273	20	10	C28	
IC38	2N3904	-	-	-	
IC39	TLC271CP	7	4	-	
IC40	HM62256CP-15	28	14	-	
IC41	HM62256CP-15	28	14	-	

is document contains information which is pro-
etary and the property of Novametrix Medical
stems Inc. and may not be reproduced, used or
closed in whole or in part without the written
nsent of Novametrix Medical Systems, Inc.

DESCRIPTION	REF DES
CAPACITOR, .1uf, 50V	C1
IC, SRM20256LM12	IC1 - IC4

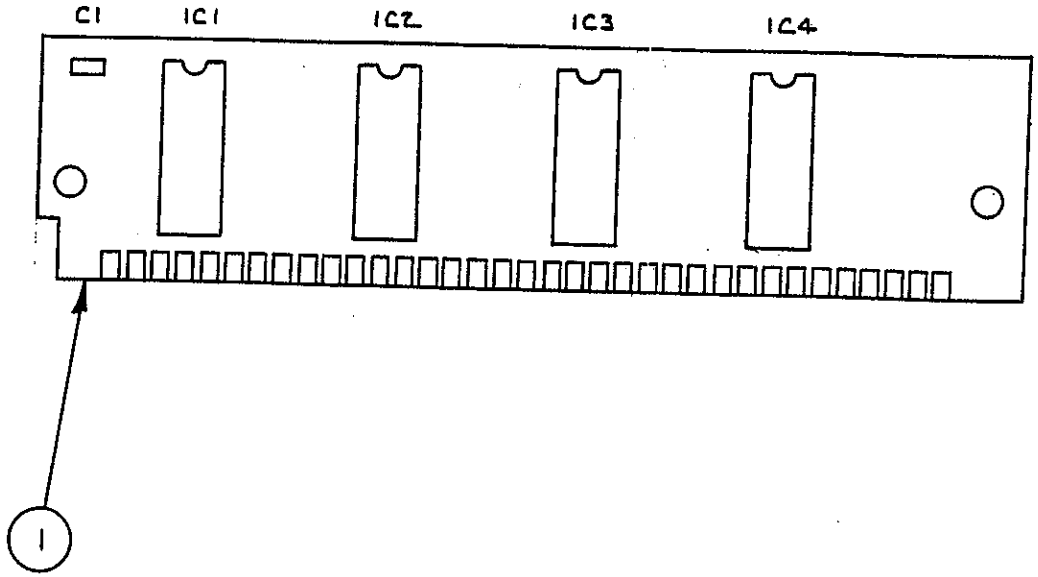

ECR PENDING 2nd
N762

ECR PENDING
N712

REV.	"R" NO.	BY DATE
03	N137	GB 8JUN88
02	N123	GB 17MAR88
01	N123	GB 17MAR88

UNLESS OTHERWISE SPECIFIED DIMENSIONS ARE IN INCHES BREAK ALL SHARP EDGES
TOLERANCES:
DEC. ± ~ FRAC. ± ~ HOLES +.007-.003 ANG. ± ~
MATERIAL: ~
FINISH: ~

TITLE: RAM SIMM BOARD ASSY, MODEL 1260

DRAWN M.R. LINEBACK 9SEP87 | CHECKED GOB 21SEP87 | MFG. ENGR. | APPROVED | USED ON 1260

NOVAMETRIX MEDICAL SYSTEMS, INC.
WALLINGFORD, CT U.S.A. 06492

SIZE	DRAWING NO.	CODE	REV.
B	2405	01	03

SCALE 2/1 SHEET 1 OF 1

This document contains information which is proprietary and the property of Novametrix Medical Systems Inc. and may not be reproduced, used or disclosed in whole or in part without the written consent of Novametrix Medical Systems Inc.

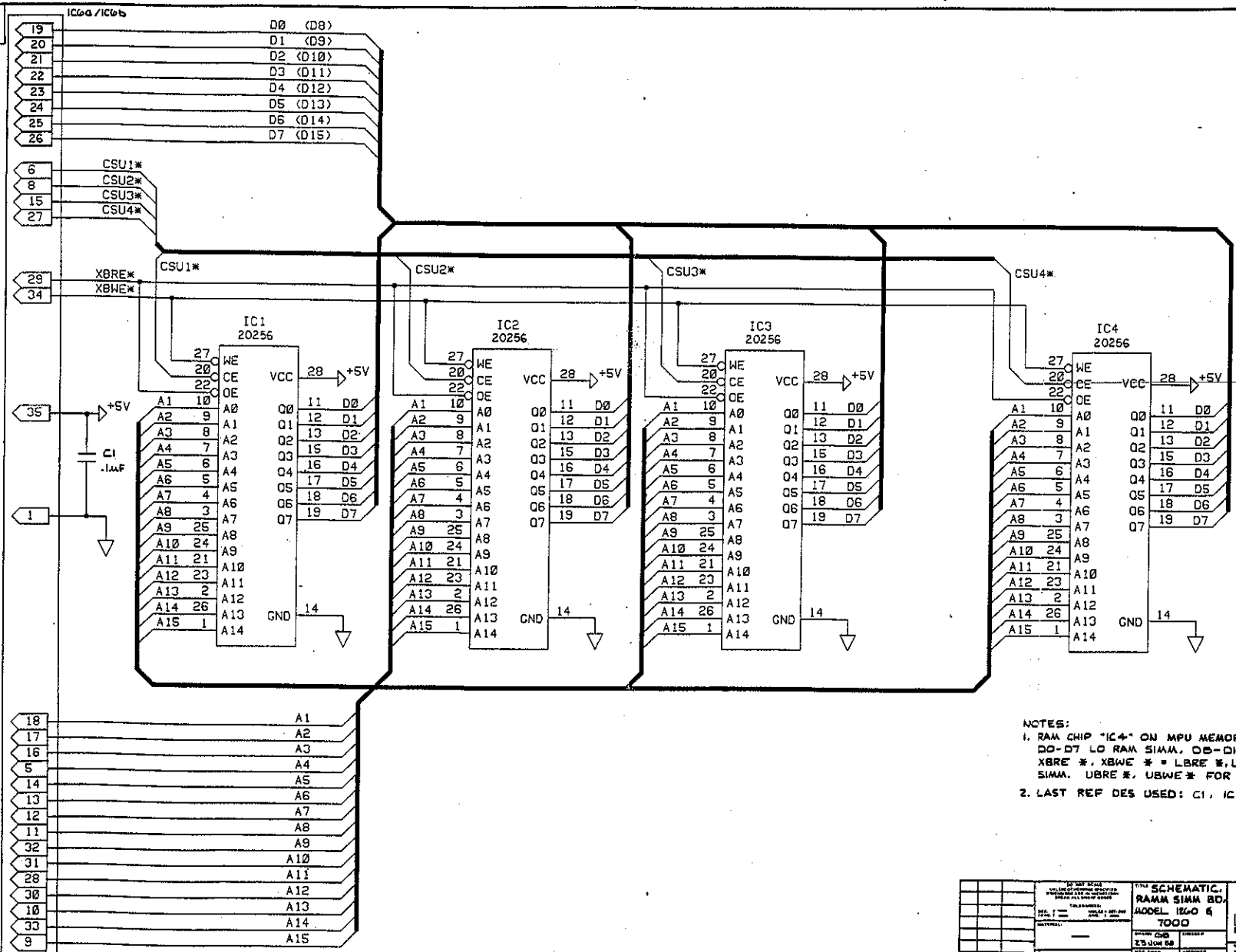

NOTES:

1. RAM CHIP "IC4" ON MPU MEMORY ONLY. D0-D7 LO RAM SIMM, D8-D15 HI RAM SIMM XBRE *, XBWE * = LBRE *, LBWE * FOR LO SIMM. UBRE *, UBWE * FOR HI SIMM.
2. LAST REF DES USED: C1, IC4

03	N137	08	TITLE SCHEMATIC, RAMM SIMM BD, MODEL 1260 & 7000	NOVAMETRIX MEDICAL SYSTEMS INC. WALLINGFORD, CT. USA 06492	
			DRAWN GB 23 JUN 88	SIZE D	DRAWING NO. 2405
				SCALE —	SHEET 1 OF 1
				82405-01	

This document contains information which is proprietary and the property of Novametrix Medical Systems Inc. and may not be reproduced, used or disclosed in whole or in part without the written consent of Novametrix Medical Systems Inc.

DESCRIPTION	REF DES
PROGRAM, 85012-07	U6

DESCRIPTION	REF DES
RESISTOR, 1KΩ, ¼W 1%	R5
1.96KΩ	R105, R121
3.32KΩ	R103, R119
4.02KΩ	R102, R118
6.04KΩ	R99, R115
8.06KΩ	R96, R112
10KΩ	R6, R19, R93, R109
10.7KΩ	R92, R108
11.5KΩ	R91, R107
12.1KΩ	R90, R106
100KΩ	R127
56.2K	R7
2.61KΩ	R104, R120
4.64KΩ	R101, R117
5.36KΩ	R100, R116
6.65KΩ	R98, R114
7.32KΩ	R97, R113
8.87KΩ	R95, R111
9.31KΩ, 1%	R94, R110
700Ω, 5%	R8
1.5KΩ, 10%	R4
RESISTOR, 22KΩ, ¼W, 5%	R1, R3, RX10, R128
CAPACITOR, 22µf, 25V, TANT	C61, C62, C63
10µf, 25V, TANT	C6, C14, C79
1µf	C11
15µf	C2, C3
CAPACITOR, .1µf	C4, C5, C7, C9, C10, C15, C16, C17, C27, C67, C68, C77–C82
CAP, 2200pf, 2%, POLY	C8
CAP, 5600pf, 2%, POLY	C13
CAP, 3900pf, 2%, POLY	C12
DIODE, 1N4148	CR3, CR4
DIODE, 1N270	CR13
DIODE, 1N4001	CR14
LED, MV548	CR2
IC, 74HC32	U18
HD63780IVOP	U2
CD4067BE	U13, U14
MC14053	U1
AD7582KN	U6
74HC138	U4
74HC00	U17
LM320LZ	U7
TL072	U19
REF02	U8
IC, 74HC273	U3, U9
CONNECTOR, 36 PIN	P1
CONNECTOR, 25 PIN	P3
TRANSISTOR, IRF523	Q1
TEST POINT	TP1, TP2, TP12
CRYSTAL, 2.4576 MHz	Y1

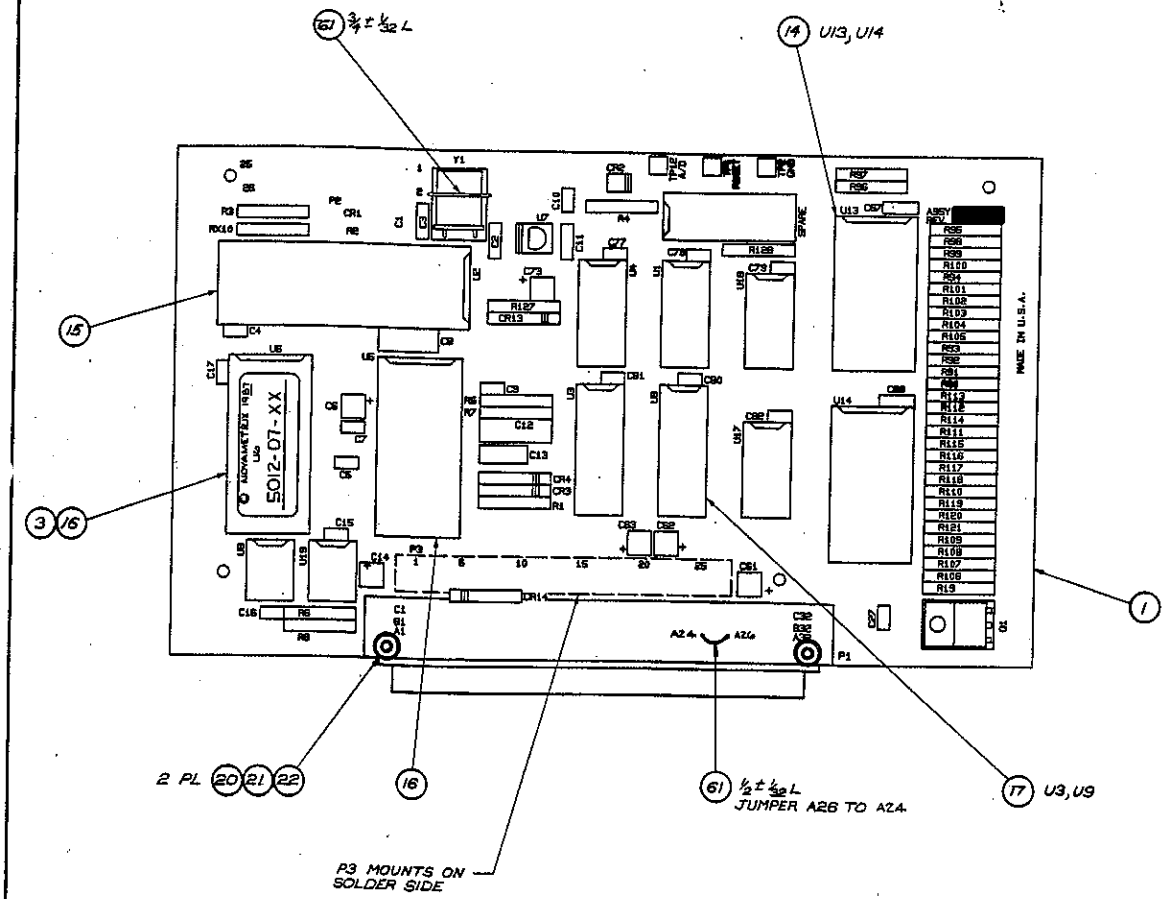

03	NJ12	11-14-88			
02	NJ08	8-30-07			
01	NJ04	12-12-01			
REV.	BY DR.	DATE			

DO NOT SCALE UNLESS STATED OTHERWISE. DIMENSIONS ARE IN INCHES AND ARE AS SHOWN ON THIS DRAWING. TOLERANCES: DECIMALS ± .010, ANGLES ± 2°

MATERIAL ~

FINISH ~

TITLE: FRONT END BD ASSY (CTC), MODEL 1260

DRAWN: A.C. LANGRAFF 11-14-88
CHECKED: 11-14-88
APPROVED: 11-14-88
MFG: 11-14-88
USED ON: 1260

NOVAMETRIX MEDICAL SYSTEMS INC. WALLINGFORD, CT. U.S.A. 06492

SIZE D | DRAWING NO. 2407 | CODE 01 | REV. 03

SCALE 2/1 | SHEET 1 OF 1

This document contains information which is proprietary and the property of Novametrix Medical Systems Inc. and may not be reproduced, used or disclosed in whole or in part without the written consent of Novametrix Medical Systems Inc.

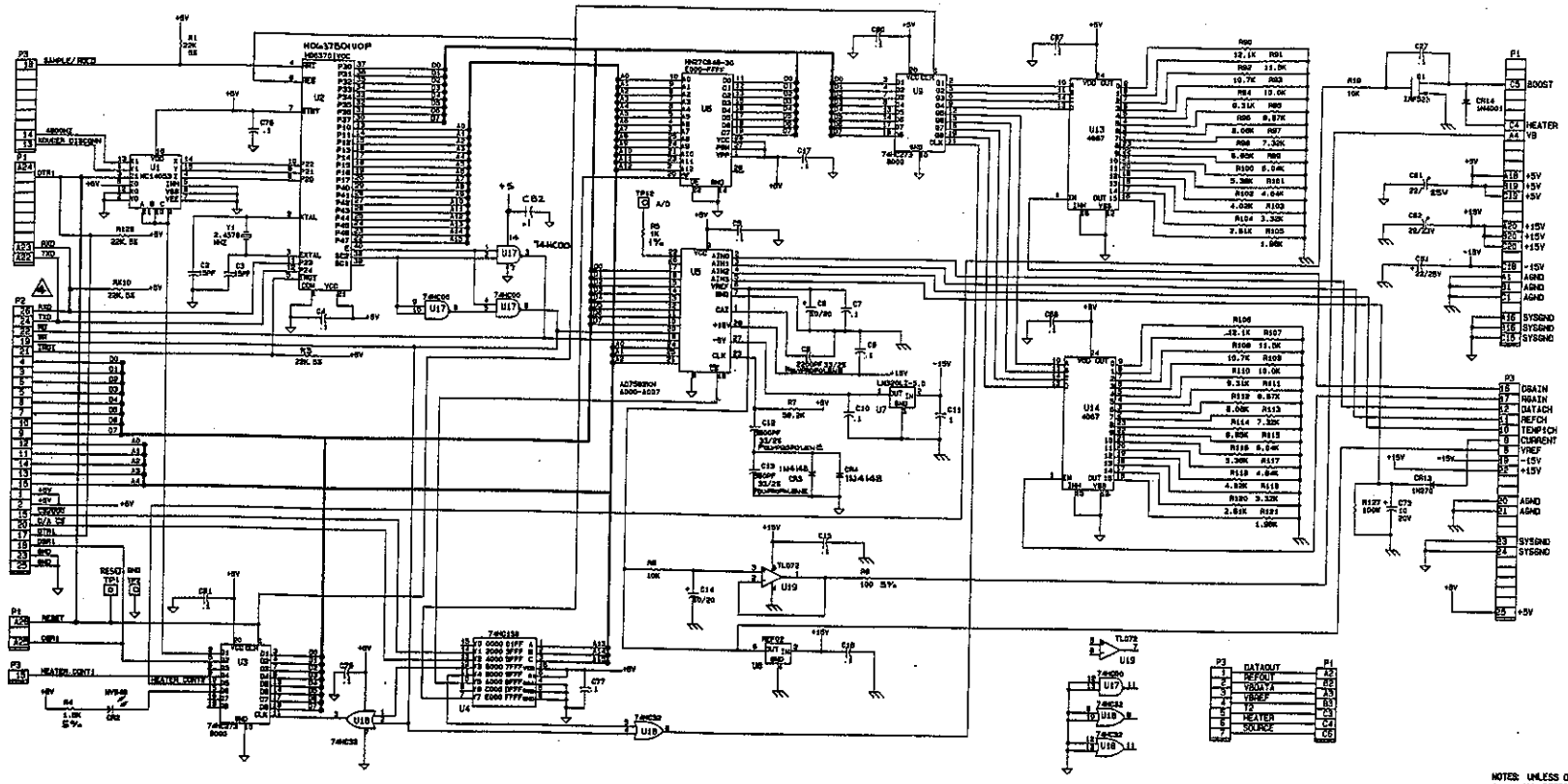

NOTES: UNLESS OTHERWISE SPECIFIED
1. ALL RESISTORS IN OHMS, 1%, 1/4W.
2. ALL CAPACITORS IN MICROFARADS, 50V, 10%.
3. ⏚ = DIGITAL GND ⏚ = ANALOG GND

⚠ CONNECTOR P2 NOT USED, SHOWN FOR FUTURE USE.

03	N123	5/6/94	
02	N95	12/6/93	
01	N44	1/12/93	
REV.	ECN.	DATE	

DO NOT SCALE
UNLESS OTHERWISE SPECIFIED DIMENSIONS ARE IN INCHES
BREAK ALL SHARP EDGES

TOLERANCES:
ANGLES ±
DECIMAL ±

MATERIAL: NONE

FINISH: —

TITLE: SCHEMATIC, FRONT END BD (CTC), MODEL 1260

DRAWN BY: BOB 8 SEP 87
CHECKED BY: 9 SEP 87
APPROVED BY: 9 SEP 87
MFG. ENGR.: BW
MODEL NO. 1260

NOVAMETRIX MEDICAL SYSTEMS INC.
WALLINGFORD, CT. U.S.A. 06492

SIZE: D
DRAWING NO.: 2407
CODE: 03
REV.: 03
SCALE: —
SHEET 1 OF 1

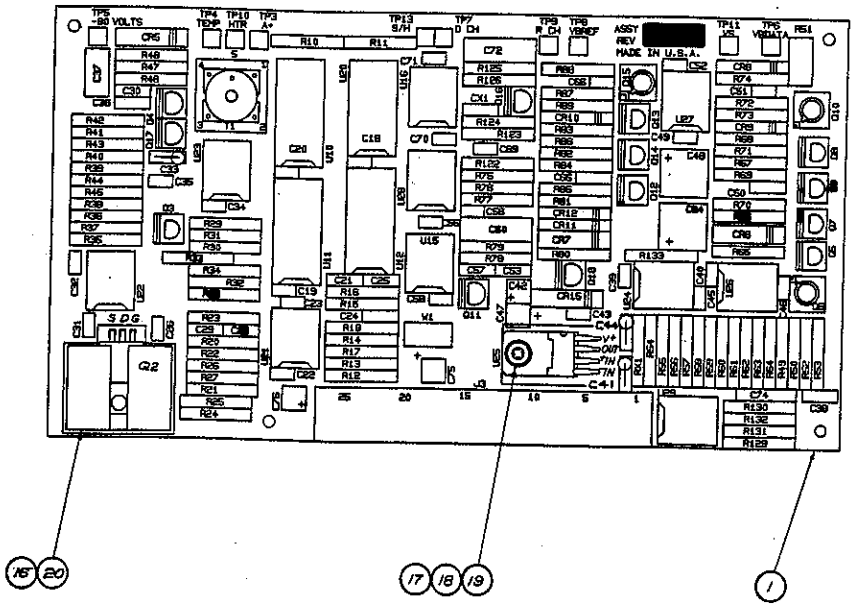

DESCRIPTION	REF DES
TRANSISTOR, 2N5401	Q7,Q9,Q12,Q14
2N5551	Q3,Q8,Q13
2N4393	Q6,Q10,Q15
VN10KM	Q4,Q11,Q16,Q17
IRF523	Q2
J270	Q5
TRANSISTOR, VP0808M	Q18
IC, CD4018	U11
CD4017	U12
74HC138	U10
LM393	U23,U29
TL072	U21,U22,U24,U26-U28
LF 398	U15,U16
74HCU04	U20
IC, UA759	U25
TEST POINT	TP3-TP11,TP13
CONNECTOR, 25 PIN	J3

DESCRIPTION	REF DES
RESISTOR, 499Ω, ¼W, 1%	R77,R124
1.5KΩ, 1%	R27
1KΩ, 1%	R18
100Ω, 10%	R38,R44,R48
1Ω, 5%	R60
1KΩ, 5%	R10,R11,R15,R24,R28,R29 R39,R47,R57,R58,R65 R75,R78,R80,R122,R126
22KΩ, 5%	R32
2KΩ, 1%	R66,R81
4.99KΩ,	R12,R13
5.11KΩ,	R14,R21,R49,R50
10KΩ,	RX1,R25,R33,R36,R37,R34 R40,R52,R54,R68,R70 R74,R83,R85,R88,R133
20KΩ,	R35,R41,R42,R89,R132
21.5KΩ,	R17
33.2KΩ,	R130
80.6KΩ,	R55,R56
100KΩ,	R45,R53
200KΩ,	R64,R76,R123
1MΩ,	R73,R79,R89,R125
3.01KΩ,	R31
178KΩ,	R69,R84
324KΩ,	R46
3.48KΩ,	R26
56.2KΩ,	R72,R87
3.3MΩ,	R131
39.2KΩ,	R43
61.9KΩ,	R71,R86
16.9KΩ,	R30
28.7KΩ, 1%	R67,R82
10KΩ, 1%	R62,R63
RESISTOR, 20KΩ, ¼W .1%	R59,R61
CAPACITOR, .001µf, MYLAR	C33,C41,C44
6.8µf, 35V	C47,C75,C76
22µf, 100V	C48,C64
470pf	C56,C69
1µf	CX1,C30,C36,C53,C57 C24,C42
.47µf, 50V	C50,C65
.1µf	C18-C23,C26,C31,C32 C34,C35,C38-C40,C43 C45,C46,C49,C52,C55 C58,C70,C71
.47µf	C37
3900pf	C60,C72
3µf, 100V	C74
CAPACITOR, 100pf, 100V	C51,C66
DIODE, 1N4746A, 18V	CR15
1N4148	CR8,CR9,CR10
1N270	CR11,CR12
DIODE, 1N4938, 200V	CR5,CR6,CR7
TRANSFORMER	T1

ECR PENDING

N774

01	N104	1 DEC 87	

TITLE: PIGGYBACK BD ASSY (CTC), MODEL 1260

NOVAMETRIX MEDICAL SYSTEMS, INC. WALLINGFORD, CT U.S.A. 06492

PART NUMBER

SCALE 2/1 | DWG NO 1260 | SIZE D | DRAWING NO 2409 | 01 | SHT 01

This document contains information which is proprietary and the property of Novametrix Medical Systems Inc. and may not be reproduced, used or disclosed in whole or in part without the written consent of Novametrix Medical Systems Inc.

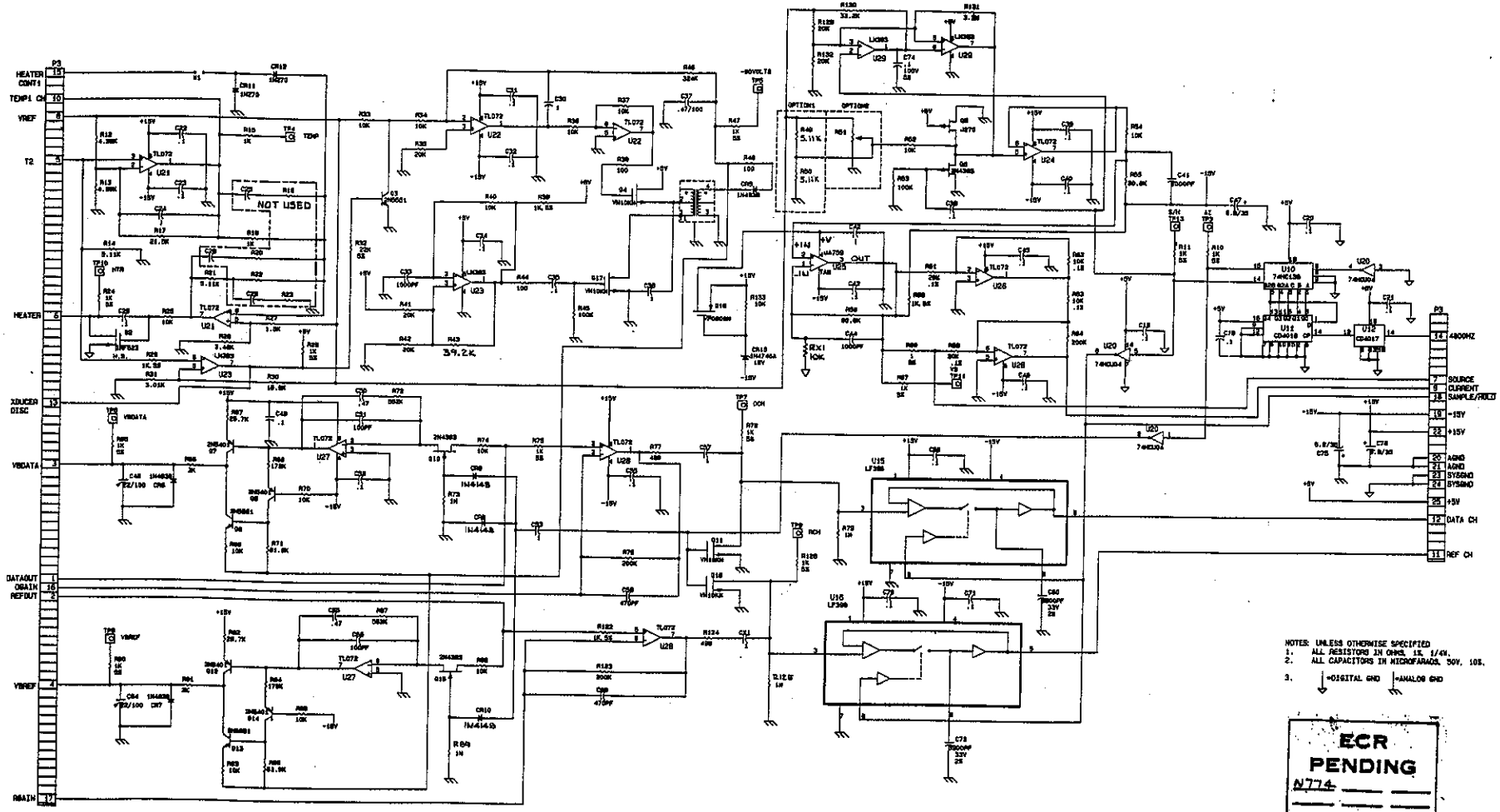

NOTES: UNLESS OTHERWISE SPECIFIED
1. ALL RESISTORS IN OHMS, 1%, 1/4W.
2. ALL CAPACITORS IN MICROFARADS, 50V, 10%.
3. =DIGITAL GND =ANALOG GND

ECR PENDING
N774

01	N104				
REV.	"X" NO.	BY DATE			

DO NOT SCALE
UNLESS OTHERWISE SPECIFIED DIMENSIONS ARE IN INCHES
TOLERANCES
MATERIAL: —
FINISH: —

TITLE: SCHEMATIC, PIGGYBACK BD, MODEL 1260

DRAWN: GDG 8 SEP 87
CHECKED: 16 SEP 87
APPR. ENGR.: BW
APPR. MGR.: 2-4-89
USED ON: 1260

NOVAMETRIX MEDICAL SYSTEMS INC.
WALLINGFORD, CT. U.S.A. 06492

SIZE	DRAWING NO.	CODE	REV.
D	2409	03	01

SCALE — SHEET 1 OF 6

This document contains information which is proprietary and the property of Novametrix Medical Systems Inc. and may not be reproduced, used or disclosed in whole or in part without the written consent of Novametrix Medical Systems Inc.

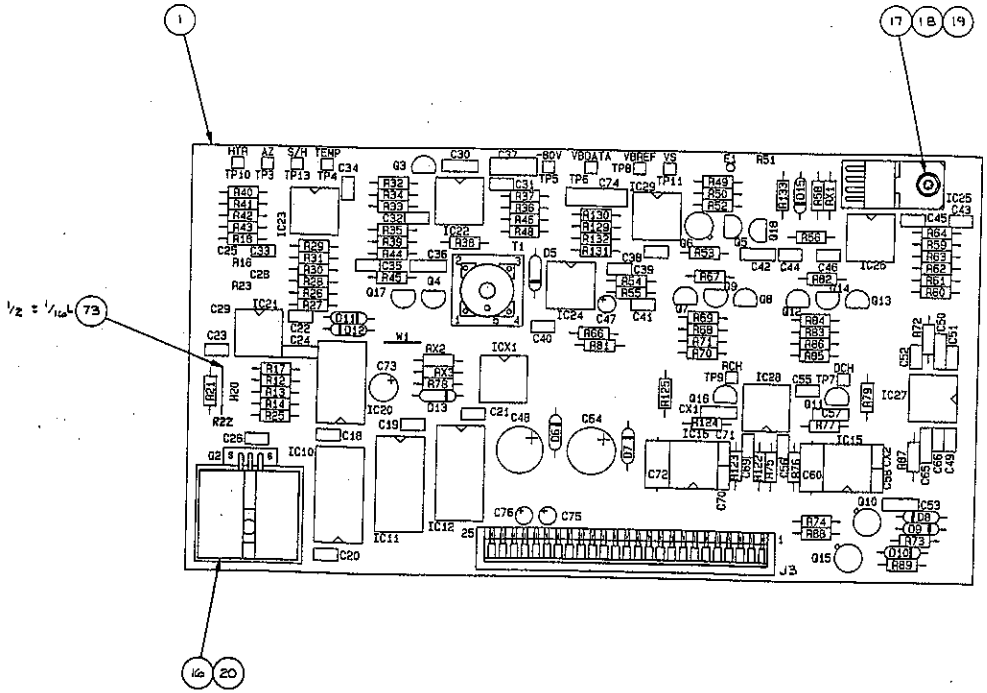

DESCRIPTION	REF DES
DIODE, 1N4746	D15
1N4148	D8-D10, D13
1N270	D11, D12
DIODE, 1N4938	D5-D7
TRANSISTOR, 2N5401	Q7, Q9, Q12, Q14
2N5551	Q3, Q8, Q13
2N4393	Q6, Q10, Q15
VN10KM	Q4, Q11, Q16, Q17
IRF523	Q2
J270	Q5
TRANSISTOR, VP0808N	Q18
IC, CD4018	IC11
CD4017	IC12
74HC138	IC10
LM393N	IC23 IC29
TL072	IC21, IC22, IC24, IC26, IC27, IC28
LF398	IC15, IC16
UA78QUIC	IC25
74HCU04	IC20
IC, MAX821	ICX1
TRANSFORMER	T1
TEST POINTS	TP3-TP11, TP13
CONNECTOR, 25 PIN	J3

DESCRIPTION	REF DES
RESISTOR, 100Ω 1/4W 1%	R38, R44, R48
499Ω	R77, R124
1K	R18, R28, R29, R39, R58, R75, R122
1.5K	R27
2K	R66, R81
4.99K	R12, R13
5.11K	R14, R21, R49, R50
10K	R25, R33, R34, R36, R37, R40, R52, R54, R68, R70, R74, R83, R85, R88, R133, RX1, RX2
20K	R35, R41, R42, R129, R132
21.5K	R17
24.9K	RX3, R78
33.2K	R130
80.6K	R55, R56
100K	R45, R53
200K	R64, R76, R123
1M	R73, R79, R89, R125
3.01K	R31
178K	R69, R84
324K	R46
3.48K	R26
562K	R72, R87
3.3M	R131
39.2K	R43
22.1K	R32
61.9K	R71, R86
16.9K	R30
1Ω	R60
28.7K 1%	R67, R82
10K .1%	R62, R63
RESISTOR, 20K, 1/4W, 1%	R59, R61
CAPACITOR, .001µf, 1%, 50V	C33, C41, C44
6.8µf, 35V	C75, C76, C47
22µf, 100V	C48, C64
470pf, 100V	C56, C69
1µf, CERAMIC	C24, C30, C36, C53, C57, CX1, C42
100pf, 50V	C51, C66
.47µf, 50V	C50, C65
.1µf	C18-C23, C26, C31, C32, C34, C35, C38-C40, C43, C45, C46, C49, C52, C55, C70, C71, CX2, C58
.47µf, 100V	C37
3900pf, POLY	C60, C72
.1µf, 100V	C74
CAPACITOR, 10µf, 25V	C73

ECR PENDING
N706 N737 N731

ECR PENDING 2nd
N769 N773

REV.	NOTE	BY/DATE
02	N137	
01	N123	

DO NOT SCALE
UNLESS OTHERWISE SPECIFIED DIMENSIONS ARE IN INCHES (MM)
BREAK ALL SHARP EDGES
TOLERANCES
DEC. ± .005 (.13)
FRAC. ± 1/64
ANGL. ± 1°
MATERIAL
FINISH

TITLE: PIGGYBACK BD ASSY, MODEL 1260 & 7000
DRAWN CB 24MAR88
ENGINEER BG 17MAR88
MFG. ENGR.
VIEW ON D4983-01

NOVAMETRIX MEDICAL SYSTEMS INC.
WALLINGFORD CT. USA 06492

SIZE	DRAWING NO.	CODE	REV
D	2418	01	02

SCALE 2/1 SHEET 1 OF 1

MILFORD BLUEPRINT INC

This document contains information which is proprietary and the property of Novametrix Medical Systems Inc. and may not be reproduced, used or disclosed in whole or in part without the written consent of Novametrix Medical Systems Inc.

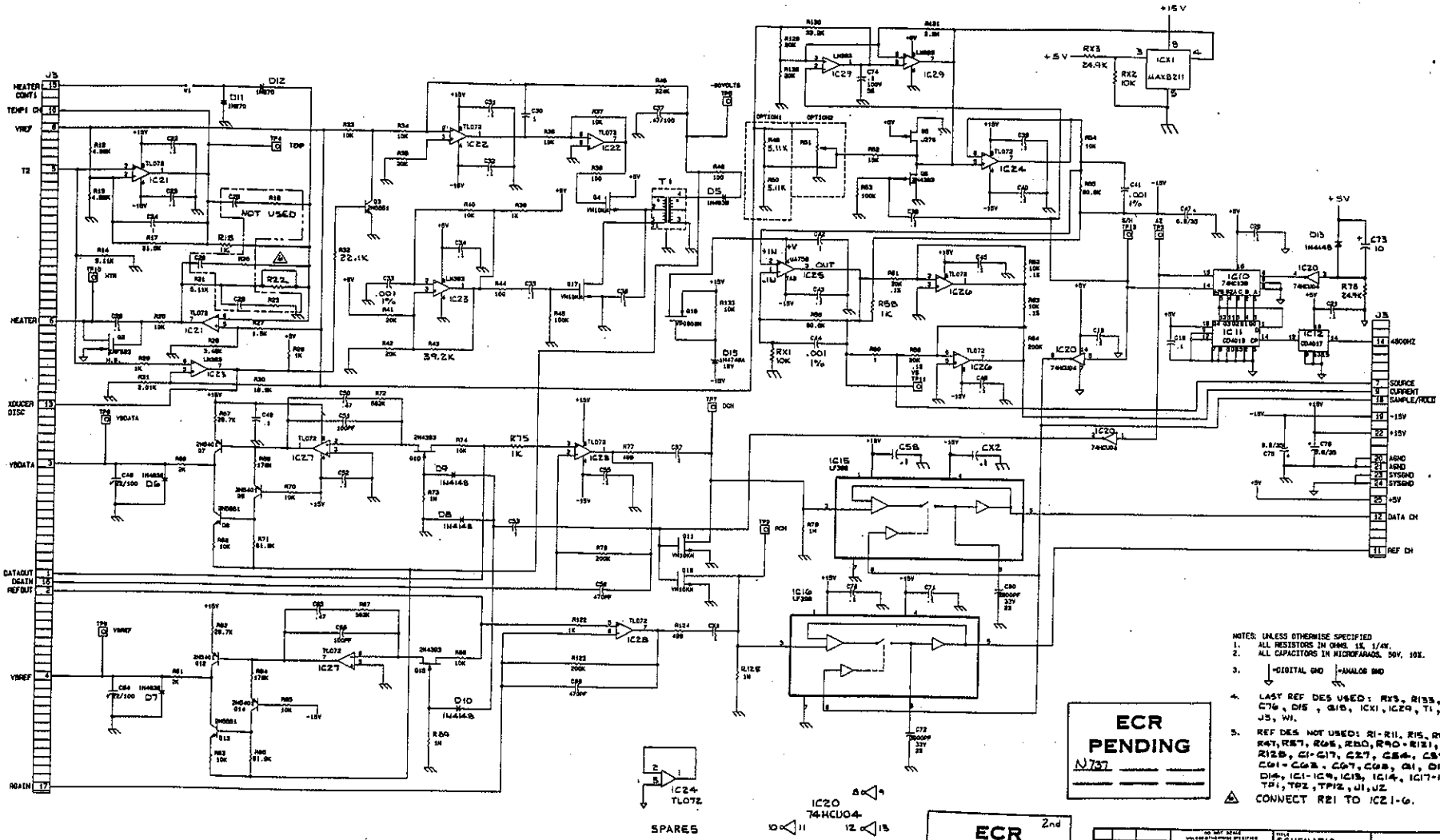

This document contains information which is proprietary and the property of Novametrix Medical Systems Inc and may not be reproduced used or disclosed in whole or in part without the written consent of Novametrix Medical Systems Inc

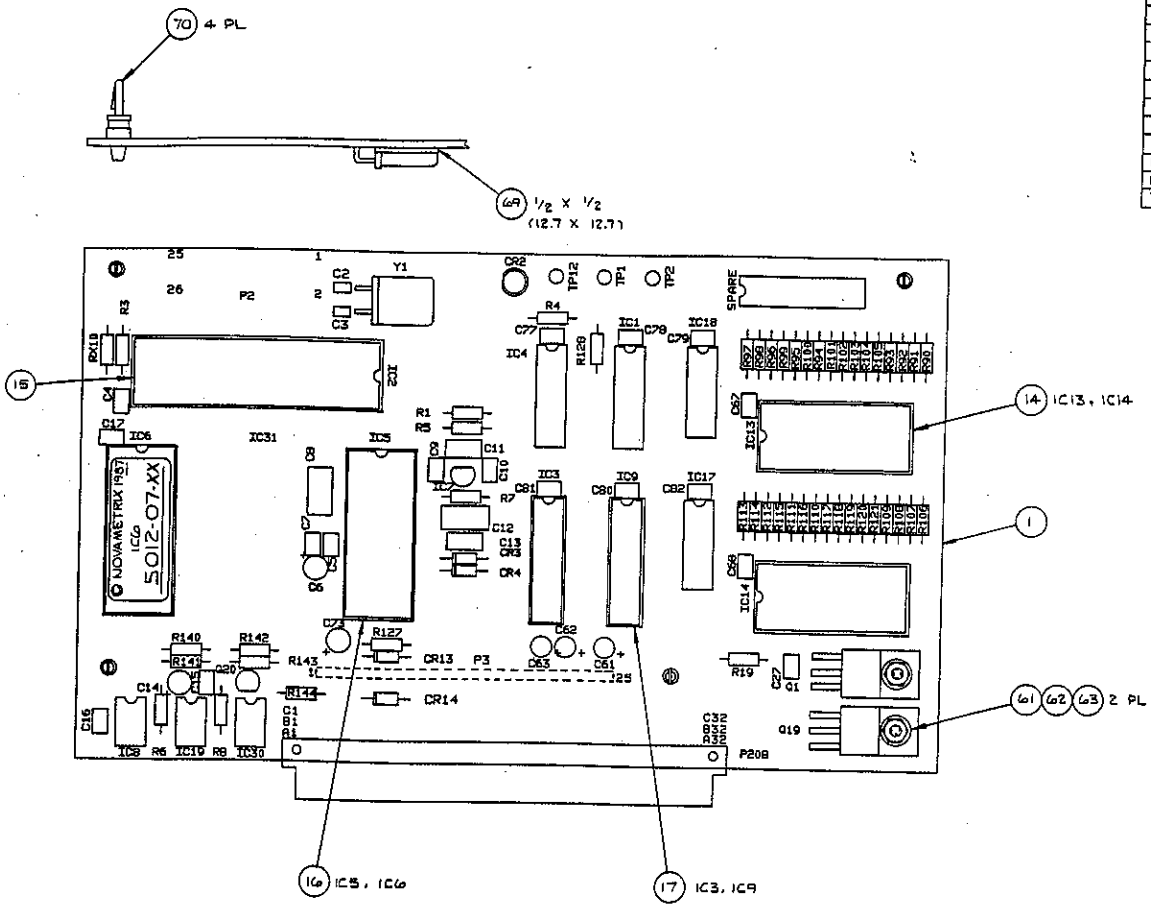

DESCRIPTION	REF DES
IC, LM320LZ-5	IC7
HD637B01VOP	IC2
74HC273N	IC3, IC9
CD4067	IC13, IC14
MC14053	IC1
AD7582KN	IC5
74HC32N	IC18
74HC138	IC4
74HC00N	IC17
TL072	IC19, IC30
IC, REF02	IC8
PROGRAM, 5012-07	IC6
TEST TERMINAL	TP1, TP2, TP12

DESCRIPTION		REF DES
RESISTOR, 100Ω, 1/4W, 10%		R8
1.5K	10%	R4
22K	10%	R1, R3, R128, RX10
1K	1%	R5
3.32K		R103, R119
4.02K		R102, R118
6.04K		R99, R115
8.06K		R96, R112
10K		R6, R19, R93, R109, R143
10.7K		R92, R108
11.5K		R91, R107
12.1K		R90, R106
21.5K		R141
100K		R127
1M		R142
56.2K		R7
31.6K		R140
1.96K		R105, R121
2.61K		R104, R120
4.64K		R101, R117
5.36K		R100, R116
6.65K		R98, R114
7.32K		R97, R113
8.87K		R95, R111
9.31K	1%	R94, R110
RESISTOR, 47K, 1/4W, 10%		R144
CAPACITOR, 10uf, 25V		C6, C14, C73
22uf, 25V		C61, C62, C63
1uf, CERAMIC		C11
15PF, 100V		C2, C3
2200PF, 33V		C8
560PF, 33V		C13
3900PF, 33V		C12
CAPACITOR, .1uf		C4, C5, C7, C9, C10, C15-C17, C27, C67, C68, C77-C82
DIODE, 1N4148		CR3, CR4
DIODE, 1N270		CR13
DIODE, 1N4001		CR14
LED, MV548, RED		CR2
TRANSISTOR, 2N3904NPN		Q20
TRANSISTOR, IRF523N		Q1, Q19
CRYSTAL, 2.4576 MHz		Y1
CONNECTOR, 96 PIN		P208
CONNECTOR, 25 PIN		P3

00	N137	GB 19JUL88	
REV	"Y" NO	BY DATE	

DO NOT SCALE UNLESS OTHERWISE SPECIFIED DIMENSIONS ARE IN INCHES. BREAK ALL SHARP EDGES

TOLERANCES: DEC 1 PLACE ±1/32 (.8); HOLES ±.005 ANG ±1°

MATERIAL: —

FINISH: —

TITLE: FRONT END BD ASSY, MODEL 1260 & 7000

DRAWN GB 19JUL88 | CHECKED SM 12 AUG 88

MFG ENGR | APPROVED

USED ON 05177-01

NOVAMETRIX MEDICAL SYSTEMS INC. WALLINGFORD, CT U.S.A. 06492

SIZE D | DRAWING NO 2421 | CODE 01 | REV 00

SCALE 2/1 | SHEET 1 OF 1

This document contains information which is proprietary and the property of Novametrix Medical Systems Inc. and may not be reproduced, used or disclosed in whole or in part without the written consent of Novametrix Medical Systems Inc.

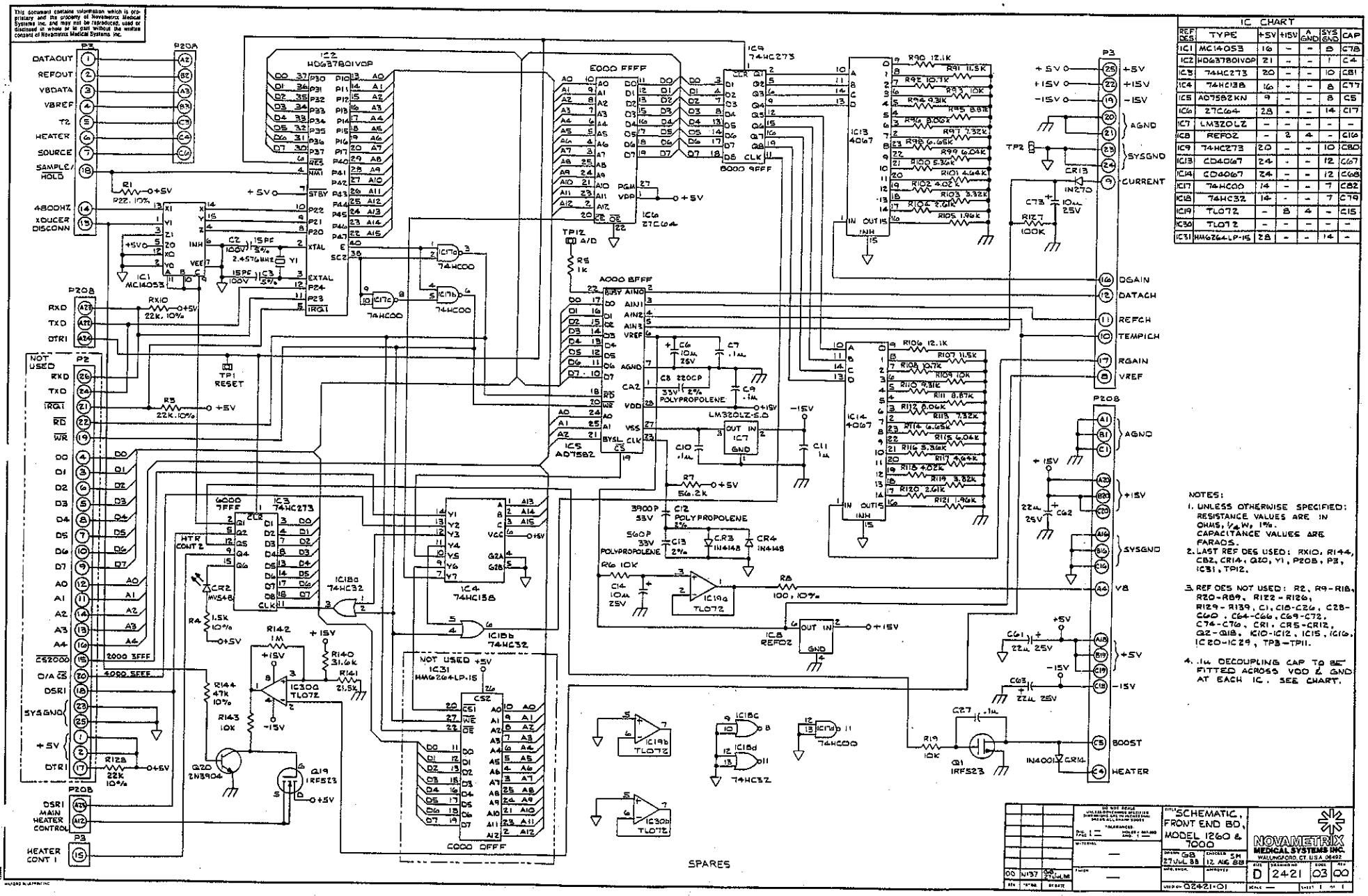

IC CHART						
REF DES	TYPE	+5V	±15V	A GND	SYS GND	CAP
IC1	MC14053	16	–	–	8	C78
IC2	HD63780IVDP	21	–	–	1	C4
IC3	74HC273	20	–	–	10	C81
IC4	74HC138	16	–	–	8	C77
IC5	AD7582KN	9	–	–	8	C5
IC6	27C64	28	–	–	14	C17
IC7	LM320LZ	–	–	–	–	–
IC8	REF02	–	2	4	–	C16
IC9	74HC273	20	–	–	10	C80
IC13	CD4067	24	–	–	12	C67
IC14	CD4067	24	–	–	12	C68
IC17	74HC00	14	–	–	7	C82
IC18	74HC32	14	–	–	7	C79
IC19	TL072	–	8	4	–	C15
IC30	TL072	–	–	–	–	–
IC31	HMG264LP-15	28	–	–	14	–

NOTES:

1. UNLESS OTHERWISE SPECIFIED: RESISTANCE VALUES ARE IN OHMS, 1/4 W, 1%. CAPACITANCE VALUES ARE FARADS.
2. LAST REF DES USED: RX10, R144, CB2, CR14, Q20, Y1, P208, P3, IC31, TP12.
3. REF DES NOT USED: R2, R9-R18, R20-R89, R122-R126, R129-R139, C1, C18-C26, C28-C60, C64-C66, C69-C72, C74-C76, CR1, CR5-CR12, Q2-Q18, IC10-IC12, IC15, IC16, IC20-IC29, TP3-TP11.
4. .1µ DECOUPLING CAP TO BE FITTED ACROSS VDD & GND AT EACH IC. SEE CHART.

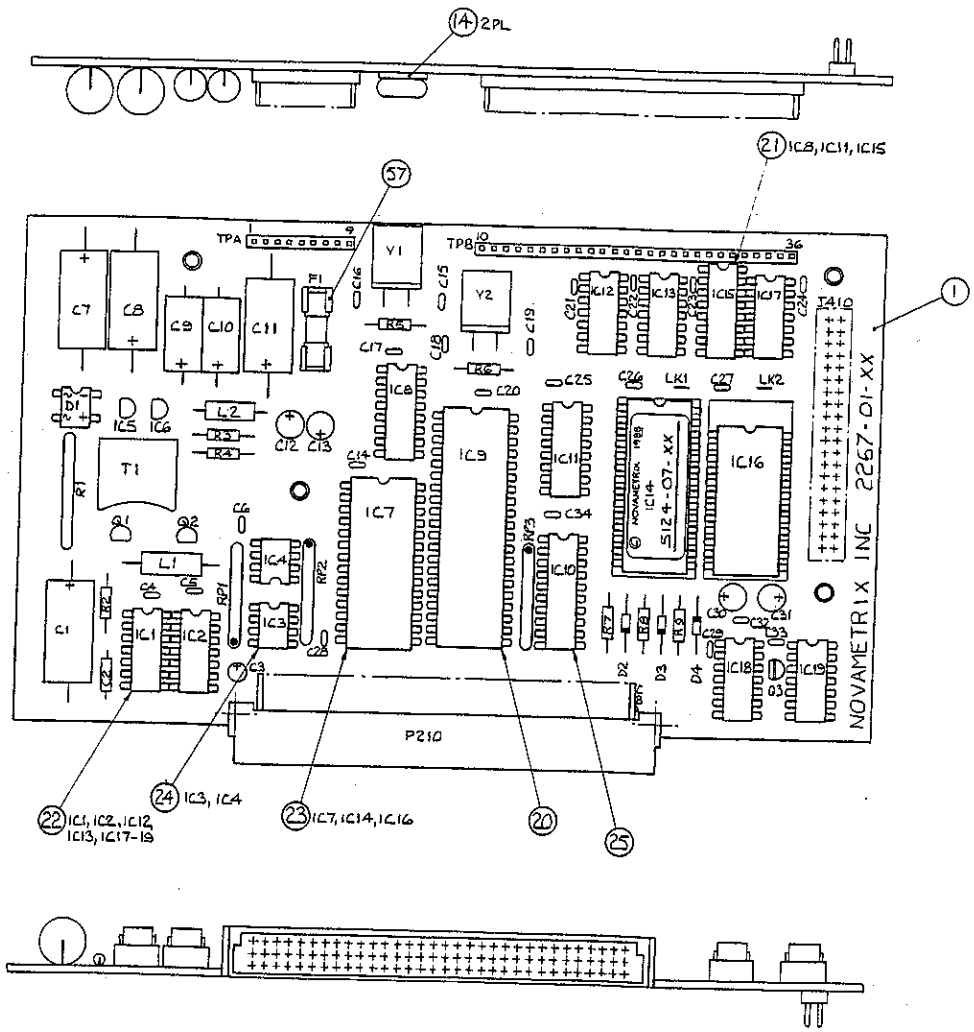

DESCRIPTION	REF. DES.
IC CD4047BCN	IC1
74HC132N	IC2
HCPL2731 OPTO ISOL	IC3, IC4
LM2931AZ-5.0 VOLT REG	IC5, IC6
82C51A PROG. COM. I'FACE	IC7
D3-4702-9	IC8
NSC800N-4 MICROPROCESSOR	IC9
74HC573N	IC10
74HC138N	IC11
74HC74N	IC12
CD4024BE	IC13, IC17
S124-07-XX	IC14
CD4020BCN	IC15
HM6116LP4 RAM	IC16
74HC14N	IC18
74HC32N	IC19
TRANSISTOR 2N7000	Q1, Q2
TRANSISTOR VN10LM FET	Q3
DIODE DF02M BRIDGE RECT	D1
DIODE 1N4148 SILICON G.P.	D2-4
CRYSTAL 2.4576 MHz VF246	Y1
CRYSTAL 8MHz	Y2

DESCRIPTION	REF. DES.
RESISTOR 100M 1W 5%	R1
143K ¼W 1%	R2
4R7 ¼W 10%	R3, R4
10M ¼W 10%	R5
1M0 ¼W 1%	R6, R8, R9
10K ¼W 1%	R7
RES. PACK 8x1K0 SIL P1COM.	RP1, RP2
RES. PACK 8x100K SIL P1COM.	RP3
CAP 1000µF 10V -10+50% ELEC.	C1, C7, C8, C11
100pF 63V 1% POLYSTY	C2
100µF 6V3 TANT.	C3
0µ1	C4-6, C14, C17, C20-28, C32-34
100µF 25V 10% ELEC.	C9, C10
10µF 25V TANT.	C12, C13, C30, C31
56pF 100V 5% 0.1" PITCH	C15, C16
33pF	C18
22pF	C19
0µ001 50V 0.1" PITCH X7R	C29
CHOKE 1mH 10% 0.25x0.5LG.	L1
CHOKE 100µH	L2
TRANSFORMER ISOLATION	T1
FUSE 100mA FAST BLO SIZE00	F1
CONN 96PIN PLUG RT.ANGLE CARD	P210
40PIN HDR DIL. GOLD	J410
36PIN HDR SIL GOLD	TP

ECR PENDING 2nd

N743 N763

REV	P/No	BY	DATE
01	N137	STRUAN	2 JUN 87

PHYSIOLOGICAL INSTRUMENTATION LIMITED

PI

A SUBSIDIARY OF NOVAMETRIX MEDICAL SYSTEMS INC

TOLERANCES EXCEPT WHERE OTHERWISE STATED
mm. ±
in. ±
DEG. ±
HOLES ±
FOR EXPLANATION OF DIM'S AND SYMBOLS SEE SS308

SCALE 2:1

THIRD ANGLE PROJECTION DIMENSIONS IN mm (in)

Copyright in the drawing belongs to PI Limited. The information contained herein which is confidential belongs to PI Limited. This drawing is not to be used for any purpose whatsoever without the prior written consent of PI Limited.

TITLE ASSEMBLY FRONT END BOARD DIGITAL

DRAWN	STRUAN	MATERIAL
DATE	12NOV87	
CHKD.	Andy K 12 Nov 87	
APPD	Andy K 12 Nov 87	

USED ON | SIZE | DRG No | CODE | REV

POWER SUPPLIES						
IC	TYPE	PINS	VDD	GND	VDDI	GNDI
1	4047	14	14	7		
2	74HC132	14	14	7		
3	HCPL2731	8			8	5
4	HCPL2731	8	8	5		
5	LM2931-AZ5	3			1	2
6	LM2931-AZ5	3				2
7	82C51	28			26	4
8	4702	16			16	8
9	NSC800-4	40			40	20
10	74HC573	20			20	10
11	74HC138	16			16	8
12	74HC74	14			14	7
13	4024B	14			14	7
14	27C64	28			28	14
15	4020B	16			16	8
16	6116	28			28	14
17	4024B	14			14	7
18	74HC14	14			14	7
19	74HC32	14			14	7

DECOUPLING			
REF	VALUE	FROM	TO
C4	0u1	VDD	GND
C5	0u1	VDD	GND
C28	0u1	VDDI	GNDI
C6	0u1	VDD	GND
C14	0u1	VDDI	GNDI
C17	0u1	VDDI	GNDI
C20	0u1	VDDI	GNDI
C34	0u1	VDDI	GNDI
C25	0u1	VDDI	GNDI
C21	0u1	VDDI	GNDI
C22	0u1	VDDI	GNDI
C26	0u1	VDDI	GNDI
C23	0u1	VDDI	GNDI
C27	0u1	VDDI	GNDI
C24	0u1	VDDI	GNDI
C32	0u1	VDDI	GNDI
C33	0u1	VDDI	GNDI

LAST USED REFERENCES

RESISTORS	R9
CAPACITORS	C34
INDUCTORS	L2
I.C.'S	IC19
TRANSISTORS	Q3
DIODES	D4
CRYSTALS	Y2
TRANSFORMERS	T1
FUSES	F1
RESISTOR PACKS	RP3
TEST POINTS	TPA9, TPB36

NOTES:
1. ALL RESISTORS 1% 1/4W UNLESS OTHERWISE STATED
2. ALL RESISTANCES IN OHMS
3. ALL CAPACITANCES IN FARADS
4. REF DES NOT USED: TPB1-TPB9

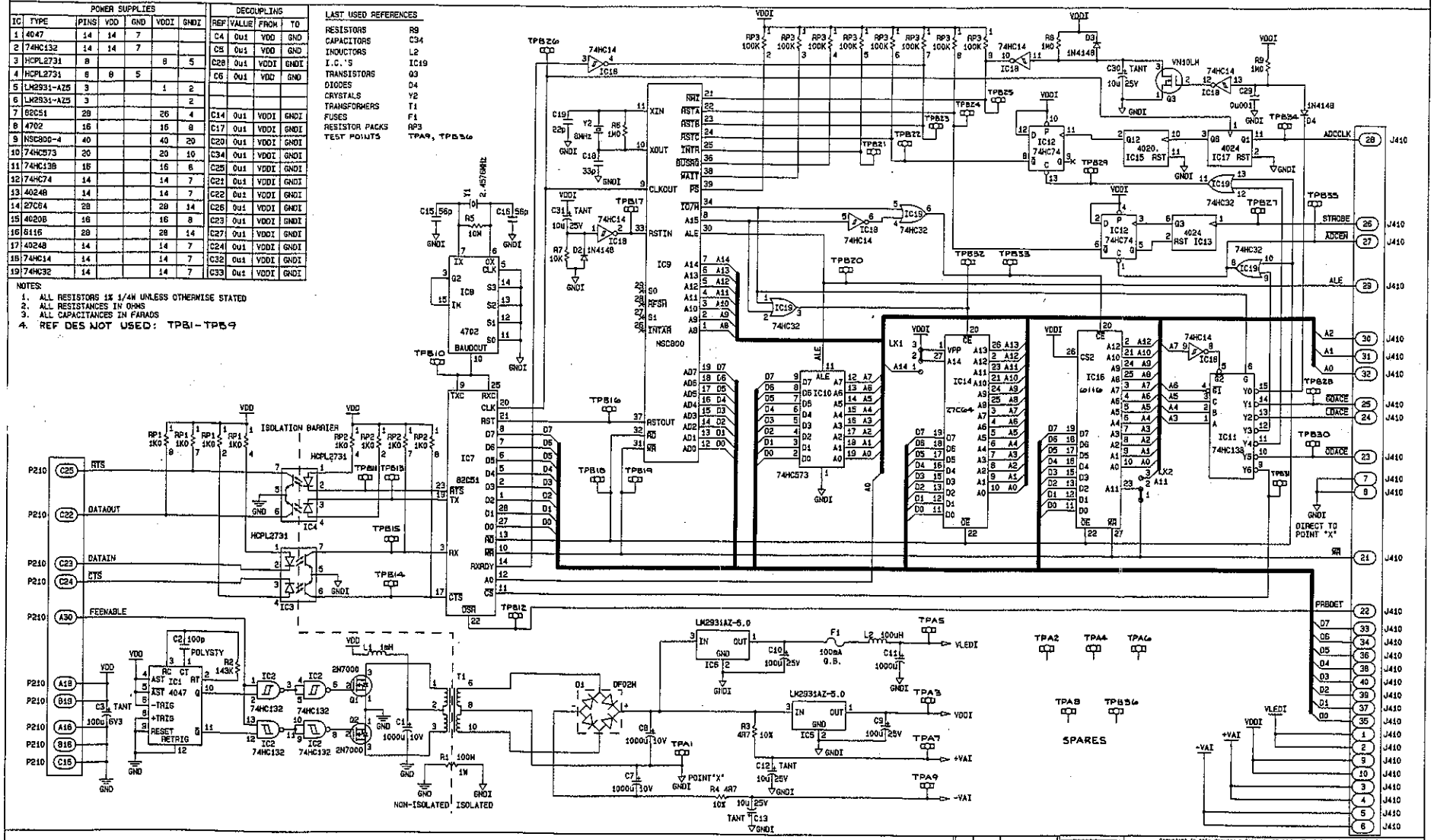

REV	R No	BY	DATE
01	N137	SRM	05JAN88

Copyright in this drawing belongs to PI Ltd. The information contained herein which is confidential belongs to PI Ltd. This drawing is not to be used for any purpose whatsoever without the prior written consent of PI Ltd

TITLE	DRAWN	DATE	SHEET
SCHEMATIC SATURATION FRONT END BOARD DIGITAL	STRUAN	14NOV87	

CHECKED	DATE	APPD	DATE
AEK	24NOV87	AEK	24NOV87

USED ON	SIZE	DRG. No.	CODE	REV
7000	D	2267	03	01

20 JUL 1988

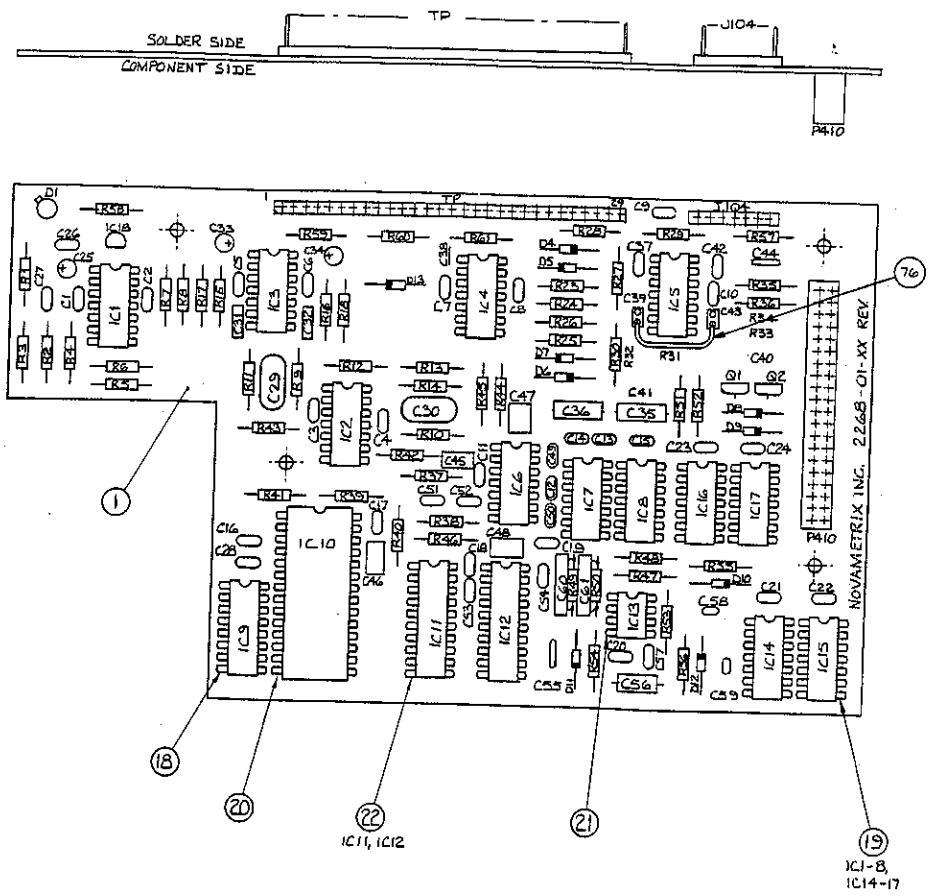

DESCRIPTION	REFERENCE
CAPACITOR 0µ1 CERAMIC	C1-24, C26, C27, C28, C37, C42, C49-54, C57
6µ8 25V 10% TANT RADIAL	C25
680pF 5% 500V MICA	C29, C30
0µ068 50V 10% POLYESTER	C31
0µ015 50V 10% POLYESTER	C32
22µF 10% 15V TANT RADIAL	C33, C34
0µ0015 160V 1% POLYSTY	C35, C36
100pF 100V 2% CERAMIC	C44
0µ22 100V 5% POLYESTER	C45, C46
1µ0 63V 10% POLYESTER	C47, C48
220pF 100V 2% CERAMIC	C55
0µ001 50V 1% MYLAR	C56
0µ001 50V CERAMIC	C58
560pF 100V CERAMIC	C59
47pF 5% 500V MICA	C60, C61
WIRE LINK	C38
I.C. LM324N QUAD OP AMP	IC1
TL064BCN OP AMP LOW OFFSET	IC2, IC3, IC5, IC6
TL064ACN QUAD BI FET II OP AMP	IC4
LM324AN QUAD OP AMP	IC7
CD4066B QUAD BILATERAL SWITCH	IC8
AD7524JN 8BIT D/A CONVERTER	IC9
AD7581JN CMOS INTERFACE	IC10
AD7528LN D/A CONVERTER	IC11
AD7528JN CMOS INTERFACE	IC12
ICM7555IPA CMOS TIMER	IC13
MM74HC14N CMOS	IC14
MM74HC132N CMOS	IC15
MM74HC08N QUAD 2I/P AND	IC16
MM74HC164N CMOS	IC17
LM334Z LINEAR	IC18
CONNECTOR 40 WAY DIL.	P410
CONNECTOR, 7 PIN	J104
TEST POINT, 29 PIN	TP1 - TP29

DESCRIPTION	REFERENCE
RESISTOR 13K0 1% ¼W	R1
12K7 1% ¼W	R2
402K 1% ¼W	R3
100K 1% ¼W	R4, R5, R26, R56, R57, R60
150K 1% ¼W	R6
60K4 1% ¼W	R7
10K 1% ¼W	R8, R54
100K 0·1% ¼W	R9, R10, R11, R13, R41, R42
200K 0·1% ¼W	R12, R14
75K 0·1% ¼W	R15
300K 0·1% ¼W	R16
15K 0·1% ¼W	R17, R18
47K5 1% ¼W	R23
8K06 1% ¼W	R24
1M0 1% ¼W	R25, R45, R46, R27
200K 1% ¼W	R47, R48
562K 1% ¼W	R28
4K99 1% ¼W	R30
40.2K, 1% ¼W	R29
47K5 1% ¼W	R35, R36
147K 1% ¼W	R37, R38
78K7 1% ¼W	R39, R40
1K0 0·1% ¼W	R43, R44
68K1 1% ¼W	R49, R50
3R3 1% ¼W	R51
5R6 1% ¼W	R52
57K6 1% ¼W	R53
20K 1% ¼W	R55
1K0 1% ¼W	R58, R59
4K99 1% ¼W	R61
NOT IN CIRCUIT	R19, R20, R21
DIODE ZENER 4V7 500mW	D13
DIODE ICL8069CCQ ZENER 1V2	D1
DIODE IN4148 SILICON GP SIGNAL	D4-12
TRANSISTOR ZTX109C NPN	Q1, Q2

ECR PENDING
P106 N689
N728

ECR PENDING 2nd
N738 N742

Q1 N137 STRUAN 21-10-88

PHYSIOLOGICAL INSTRUMENTATION LIMITED
PI
A SUBSIDIARY OF NOVAMETRIX

TOLERANCES EXCEPT WHERE OTHERWISE STATED
mm. ± ·8
in. ± 1/32
DEG. ± ~
HOLES ± ~
FOR EXPLANATION OF DIM AND SYMBOLS SEE

SCALE 2:1
THIRD ANGLE PROJECTION DIMENSIONS IN mm (in)

Copyright in this drawing belongs to PI Limited. The information contained herein which is confidential belongs to PI Limited. This drawing is not to be used for any purpose whatsoever without the prior written consent of PI Limited.

TITLE
SATURATION ANALOG
FRONT END
BOARD

DRAWN	STRUAN	MATERIAL
DATE	15SEP87	
CHKD.	[signature]	
APPD.	[signature]	
USED ON	SIZE	DWG. No.

NOTES

1. ALL RESISTORS 1% 1/4W UNLESS STATED
2. ALL RESISTANCES IN OHMS
3. ALL CAPACITANCES IN FARADS

LAST USED REFERENCES

RESISTORS	R61
CAPACITORS	C61
DIODES	D13
TRANSISTORS	Q2
INTEGRATED CIRCUITS	IC18

NOT USED

R19-R22, R31-R34
C36-C41, C43
D2, D3

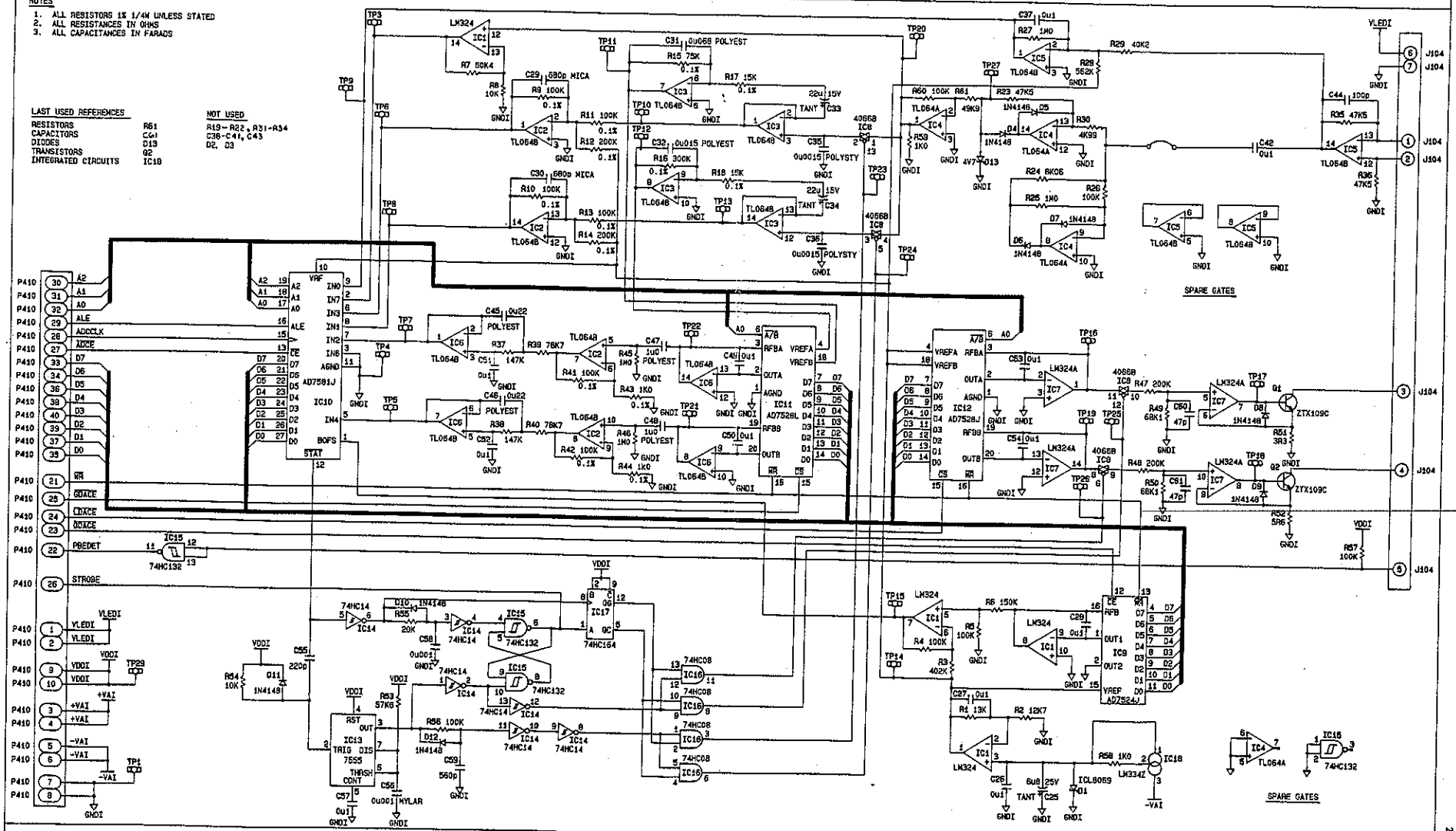

Copyright in this drawing belongs to PI Ltd. The information contained herein which is confidential belongs to PI Ltd. This drawing is not to be used for any purpose whatsoever without the prior written consent of PI Ltd

REV	R No	BY	DATE
01	N137	SRN	SJAN88

PI

TITLE: SCHEMATIC SATURATION FRONT END ANALOG BOARD

DRAWN	DATE	SHEET
STRUAN	27NOV87	1 OF 2

CHECKED	DATE	APPD	DATE
A.E.K.	7DEC87	A.E.K.	7DEC87

USED ON	SIZE	DRG. No.	CODE	REV
7000	0	2268	03	01

20 JUL 988

POWER SUPPLIES								DECOUPLING			
IC	TYPE	PINS	VLEDI	VDDI	+VAI	-VAI	GNDI	REF	VALUE	FROM	TO
1	LM324	14			4	11		C1	0u1	+VAI	GNDI
								C2	0u1	-VAI	GNDI
2	TL064B	14			4	11		C3	0u1	+VAI	GNDI
								C4	0u1	-VAI	GNDI
3	TL064B	14			4	11		C5	0u1	+VAI	GNDI
								C6	0u1	-VAI	GNDI
4	TL064A	14			4	11		C7	0u1	+VAI	GNDI
								C8	0u1	-VAI	GNDI
5	TL064B	14			4	11		C9	0u1	+VAI	GNDI
								C10	0u1	-VAI	GNDI
6	TL064B	14			4	11		C11	0u1	+VAI	GNDI
								C12	0u1	-VAI	GNDI
7	LM324A	14			4	11		C13	0u1	+VAI	GNDI
								C14	0u1	-VAI	GNDI
8	4066B	14		14			7	C15	0u1	VDDI	GNDI
9	AD7524J	16		14			3	C16	0u1	VDDI	GNDI
10	AD7581J	28		28			14	C17	0u1	VDDI	GNDI
11	AD7528L	20		17			5	C18	0u1	VDDI	GNDI
12	AD7528J	20		17			5	C19	0u1	VDDI	GNDI
13	7555	8		8			1	C20	0u1	VDDI	GNDI
14	74HC14	14		14			7	C21	0u1	VDDI	GNDI
15	74HC132	14		14			7	C22	0u1	VDDI	GNDI
16	74HC08	14		14			7	C23	0u1	VDDI	GNDI
17	74HC164	14		14			7	C24	0u1	VDDI	GNDI
18	LM334Z	3				3					

REV	R No	BY DATE
01	N137	SRM 5JAN88

PI

Copyright in this drawing belongs to PI Ltd. The information contained herein which is confidential belongs to PI Ltd. This drawing is not to be used for any purpose whatsoever without the prior written consent of PI Ltd

TITLE
SCHEMATIC
SATURATION
FRONT END
ANALOG BOARD

DRAWN	DATE	SHEET
STRUAN	27NOV87	2 OF 2

CHECKED	DATE	APPD	DATE
A.E.K.	7DEC87	A.E.K.	7DEC87

USED ON	SIZE	DRG. No.	CODE	REV
7000	D	2268	03	01

20 JUL 1988

This document contains information which is proprietary and the property of Novametrix Medical Systems Inc. and may not be reproduced, used or disclosed in whole or in part without the written consent of Novametrix Medical Systems Inc.

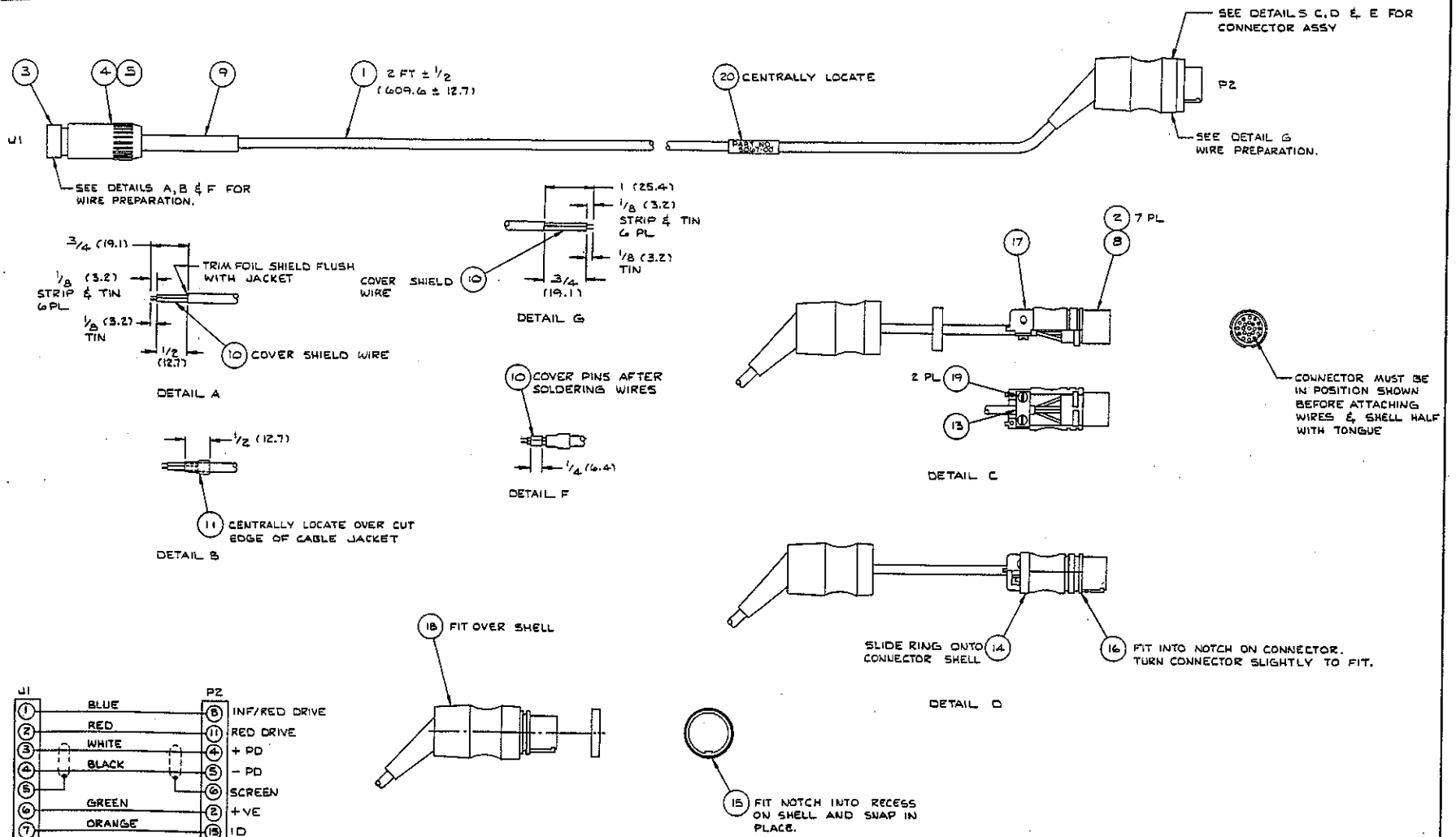

TITLE: ADAPTER CABLE ASSY, MODEL 500 SNSR TO MODEL 7000		NOVAMETRIX MEDICAL SYSTEMS INC. WALLINGFORD, CT. U.S.A. 06492	
DRAWN: GB 11APR88	CHECKED: SM 17 MAY 88	SIZE: D	DRAWING NO.: 5067
MFG. ENGR.: BW 16 AUG 88	APPROVED: 16 AUG 88	CODE: 00	REV.: 00
USED ON: 7000		SCALE: 1/1	SHEET 1 OF 1

This document contains information which is proprietary and the property of Novametrix Medical Systems Inc. and may not be reproduced, used or disclosed in whole or in part without the written consent of Novametrix Medical Systems Inc.

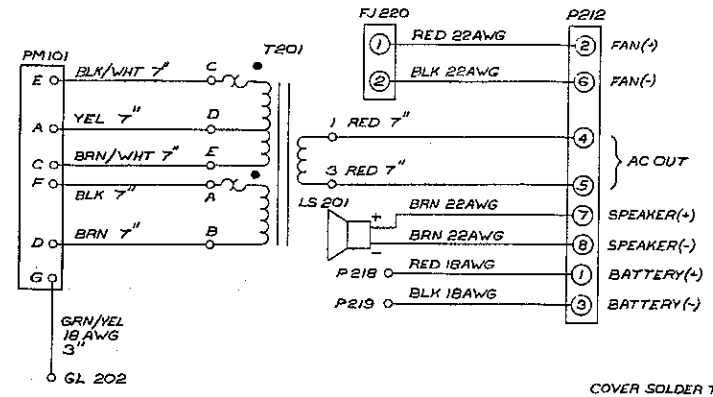

WIRING DIAGRAM

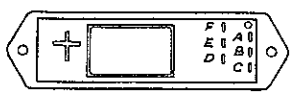

VIEW A-A

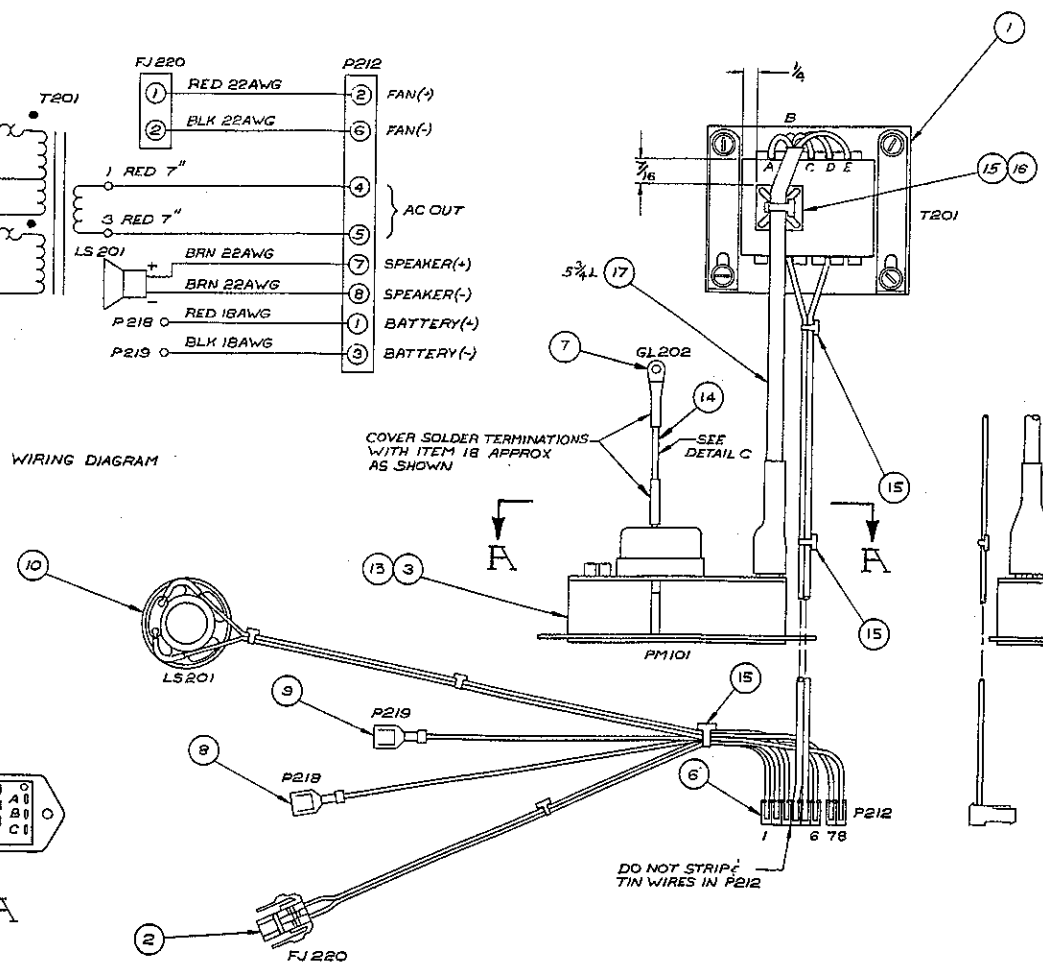

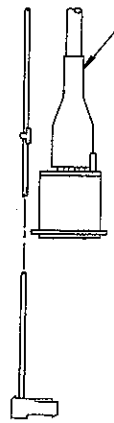

SLIDE ITEM 19 DOWN, COVERING INSULATED TERMINALS, AND SHRINK TO FIT APPROX AS SHOWN SEE DETAIL B

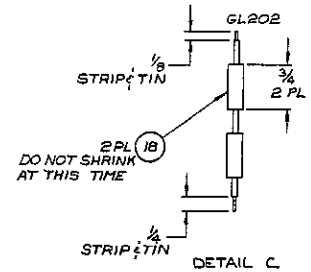

DETAIL C

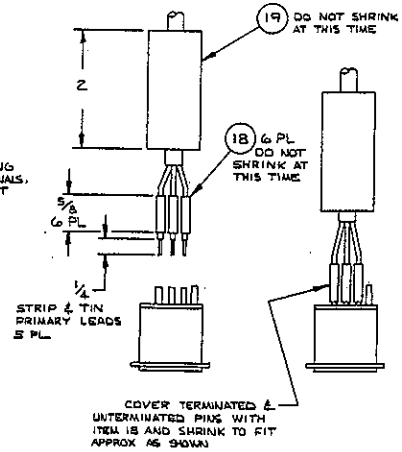

DETAIL B

NOTES:
1. FOR WIRE LENGTH, COLOR & AWG SEE WIRE DIAGRAM

02	N123				
01	N104				
REV					

DO NOT SCALE UNLESS OTHERWISE SPECIFIED DIMENSIONS ARE FOR REFERENCE ONLY

TOLERANCES

MATERIAL ~

FINISH ~

TITLE: POWER HARNESS ASSY, MODEL 1260

DRAWN: CRITELLI

WIR. FINISH: B(1)

MODEL 1260

NOVAMETRIX MEDICAL SYSTEMS INC. WALLINGFORD, CT. U.S.A. 06492

SIZE D | DRAWING NO. 5006 | CODE 01 | REV 02

SCALE 2/1 | SHEET 1 OF 1

This document contains information which is proprietary and the property of Novametrix Medical Systems Inc. and may not be reproduced, used or disclosed in whole or in part without the written consent of Novametrix Medical Systems, Inc.

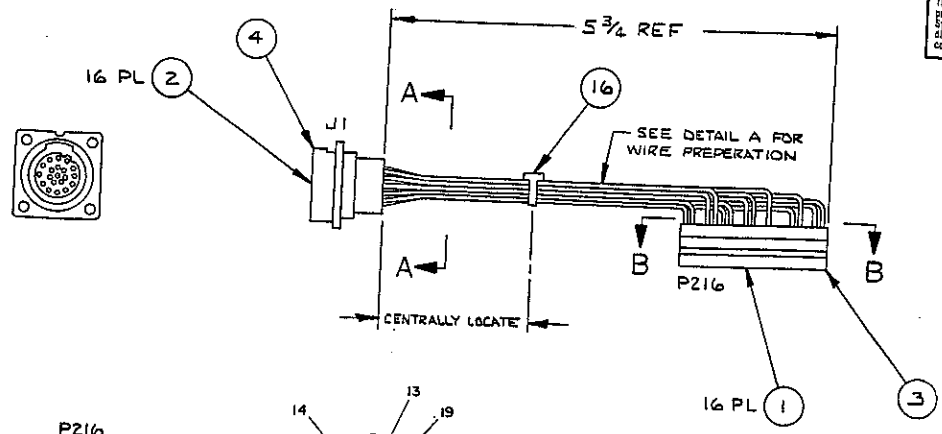

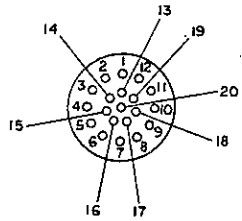

REAR VIEW A-A
SCALE : 2/1

REAR VIEW B-B

J1		P216	
1	WHT 24AWG 5 7/8"	29	SOURCE
3	GRA 24AWG 4 7/8"	9	Vb REF
4	BLU 24AWG 4 5/8"	3	REF OUT
6	RED 24AWG 4 1/2"	1	DATA OUT
7	WHT/BRN 24AWG 4 3/4"	7	Vb DATA
9	GRN 24AWG 5 3/8"	17	HEATER
10	ORN 24AWG 5 7/8"	32	OUTSIDE SHLD
12	BRN 24AWG 6"	38	-15V
13	ORN 24AWG 5 7/8"	30	SOURCE SHLD
14	WHT/RED 24AWG 5 1/8"	13	Vb
15	VIO 24AWG 5"	11	T2
16	RED 24AWG 6"	35	+5V
17	BLK 24AWG 5 5/8"	23	BOOST
18	BRN 24AWG 6"	36	-15V
19	GRN 24AWG 6"	37	+15V
20	WHT/BLK 24AWG 5 7/8"	31	A GND

WIRING DIAGRAM

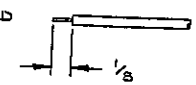

16 PL - BOTH ENDS
DO NOT TIN

DETAIL A
SCALE : 2/1

ECR PENDING
N779

NOTES:
1. FOR WIRE LENGTH, COLOR & AWG SEE WIRING DIAGRAM.

REV	"P" NO	BY DATE
01	N104	JM 30 NOV 87

UNLESS OTHERWISE SPECIFIED DIMENSIONS ARE IN INCHES BREAK ALL SHARP EDGES
TOLERANCES
DEC ± ~ FRAC ± 1/32 HOLES ± .007-.003 ANG ± ~
MATERIAL ~
FINISH ~

TITLE: CO2 INPUT HARNESS, MODEL 1260
DRAWN MRL 9SEP87 CHKD BW APPROVED N.O. 9-15-87
SCALE 1/1 USED ON 1260

NOVAMETRIX MEDICAL SYSTEMS, INC.
WALLINGFORD, CT U.S.A. 06492

PART NUMBER

SIZE	DRAWING NO	CODE	REV
C	4998	01	01

This document contains information which is proprietary and the property of Novametrix Medical Systems Inc. and may not be reproduced, used or disclosed in whole or in part without the written consent of Novametrix Medical Systems Inc.

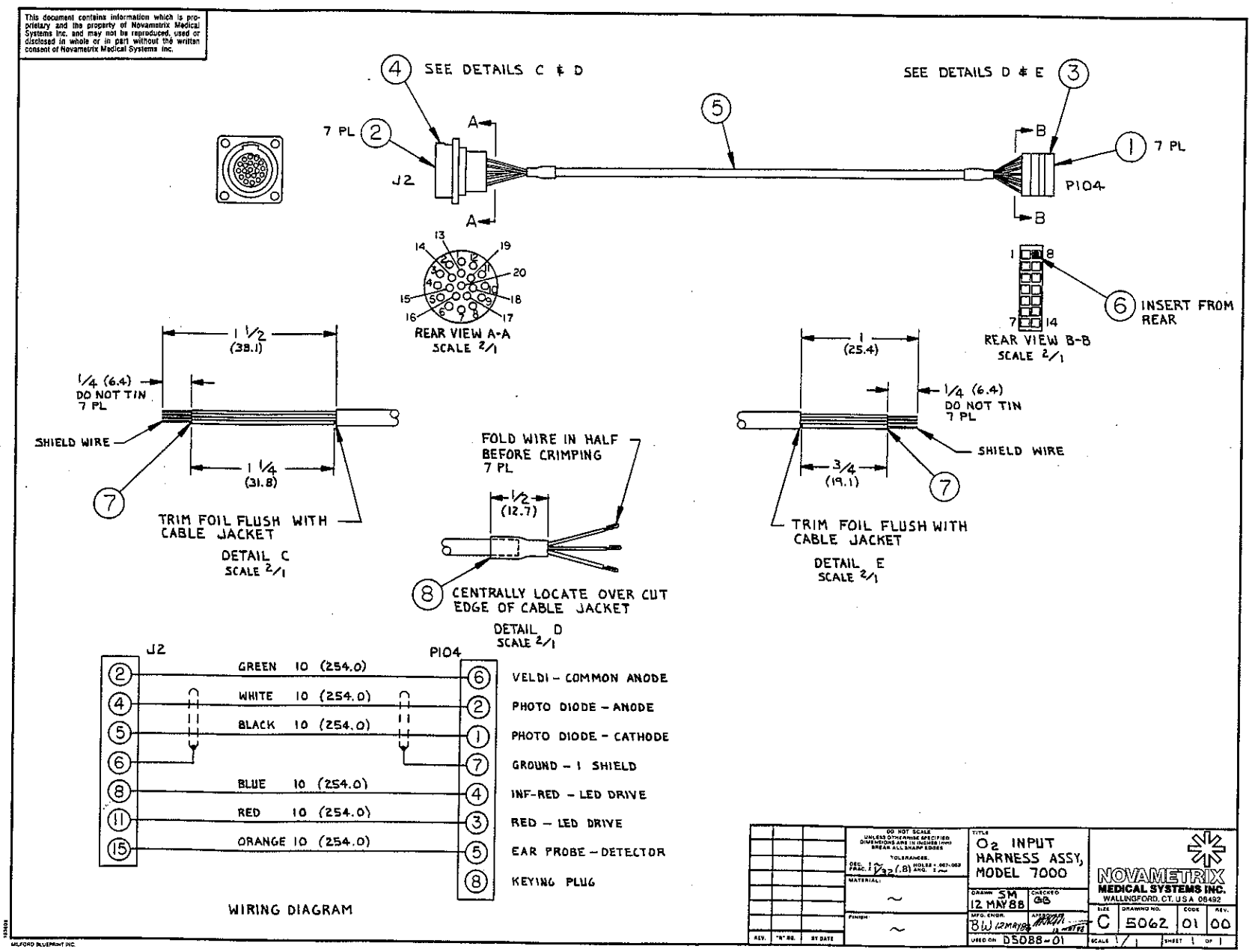

MILFORD BLUEPRINT INC.

This document contains information which is proprietary and the property of Novametrix Medical Systems Inc. and may not be reproduced, used or disclosed in whole or in part without the written consent of Novametrix Medical Systems, Inc.

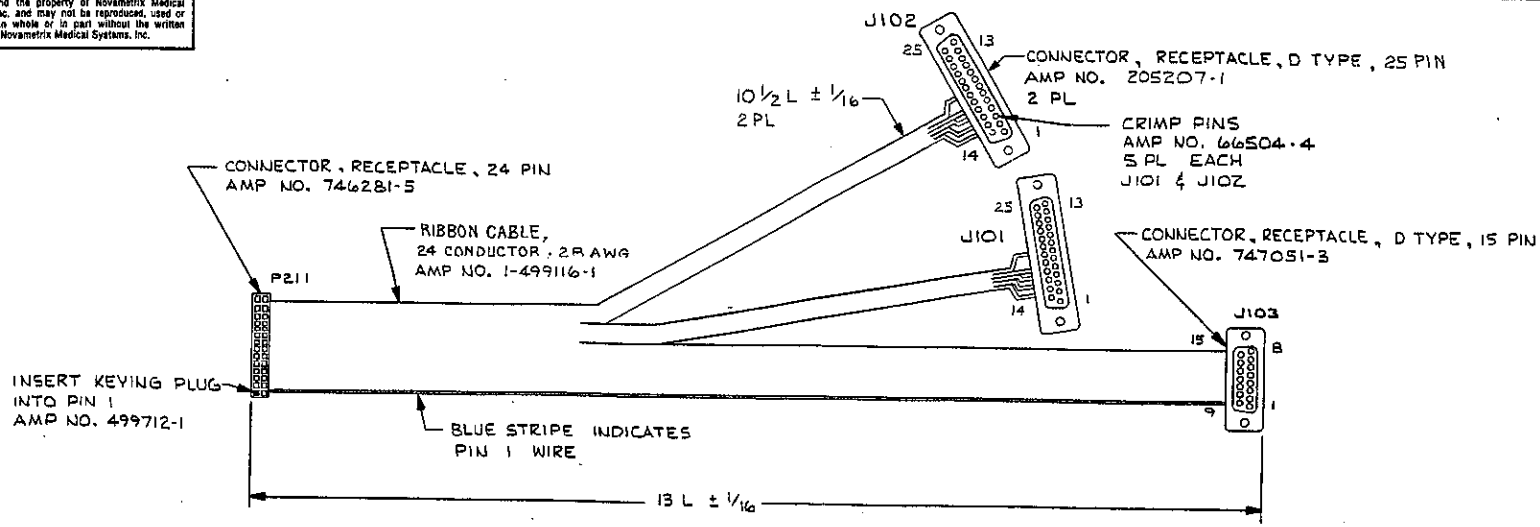

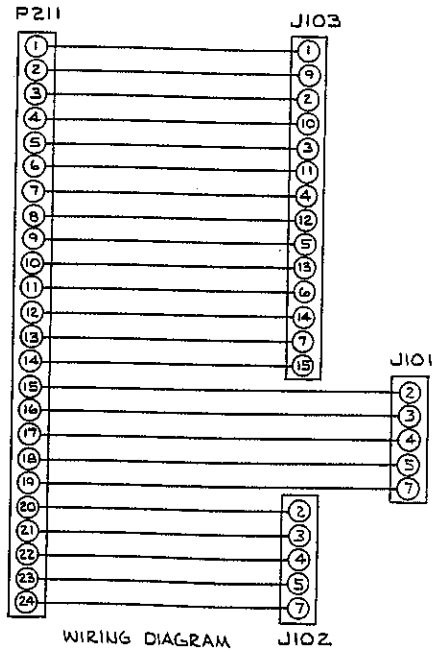

WIRING DIAGRAM

ECR PENDING

N6090

REV	"N" NO	BY DATE
01	N137	GB 13 JUN 88
00	N104	13 JAN 88

UNLESS OTHERWISE SPECIFIED DIMENSIONS ARE IN INCHES. BREAK ALL SHARP EDGES. TOLERANCES: DEC. ± — FRAC ± — HOLES ± .001-.003 ANG. ± —

MATERIAL: MARSHALL NO. CPD-6119

FINISH: —

TITLE: RIBBON CABLE, REAR PANEL, MODEL 1260

DRAWN: SM 15 DEC 87 | CHKD: | APPROVED:

SCALE: 1/1 | USED ON: D5055-01

NOVAMETRIX MEDICAL SYSTEMS, INC.
WALLINGFORD, CT U.S.A. 06492

PART NUMBER

SIZE	DRAWING NO	CODE	REV
C	5074	10	01

This document contains information which is proprietary and the property of Novametrix Medical Systems Inc. and may not be reproduced, used or disclosed in whole or in part without the written consent of Novametrix Medical Systems, Inc.

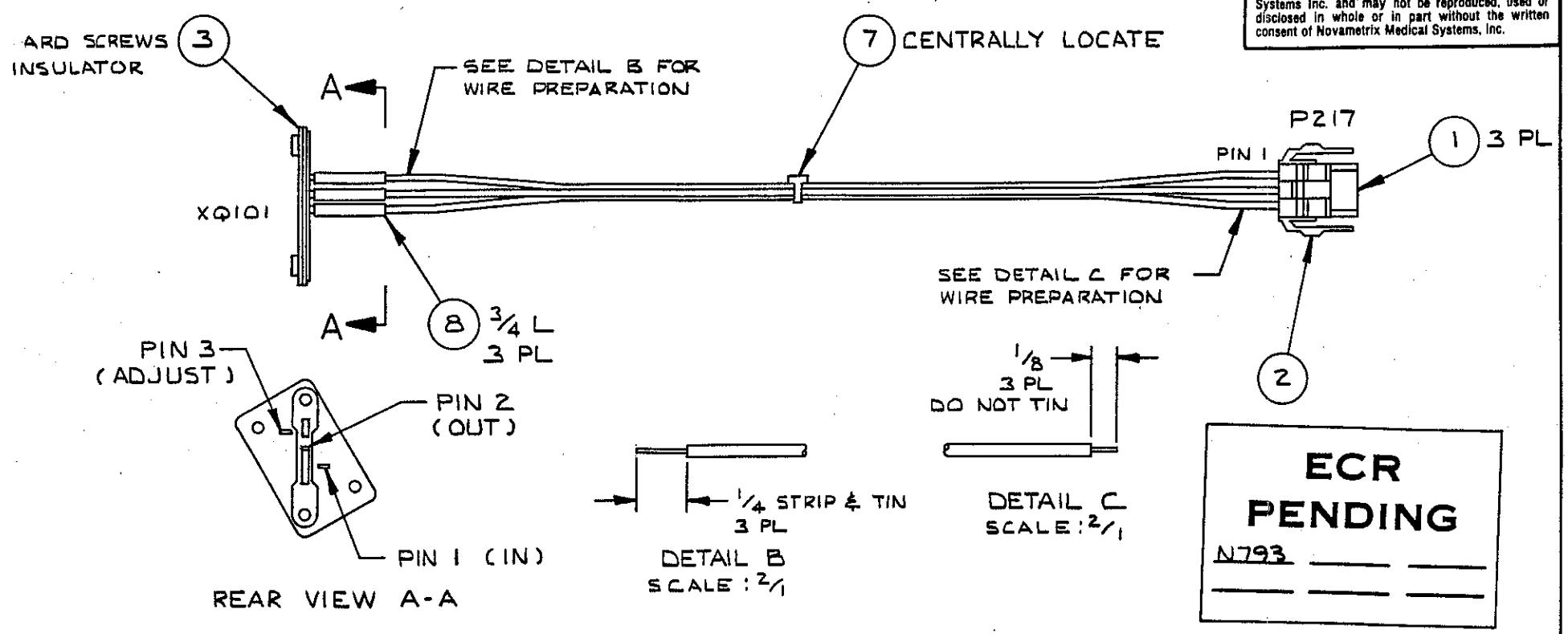

ECR PENDING
N793

1. FOR WIRE LENGTH, COLOR & AWG SEE WIRING DIAGRAM.

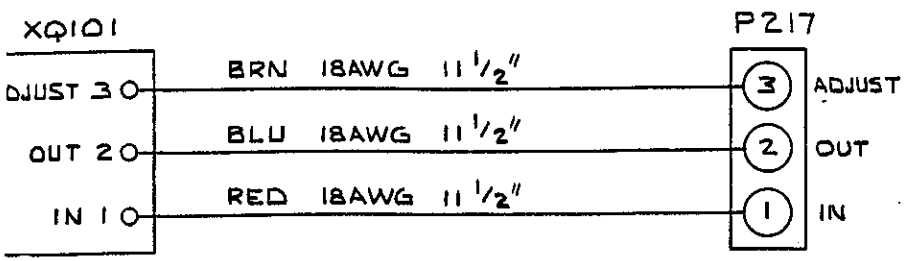

WIRING DIAGRAM

REV.	"R" NO.	BY DATE
01	N123	GB 17MAR88

UNLESS OTHERWISE SPECIFIED DIMENSIONS ARE IN INCHES BREAK ALL SHARP EDGES
TOLERANCES: DEC. ± ~ FRAC. ± 1/32 HOLES +.007-.003 ANG. ± ~
MATERIAL: ~
FINISH: ~

TITLE: REGULATOR HARNESS ASSY, MODEL 1260

DRAWN M.R. LINEBACK 10SEP87 | CHECKED GOB 16SEP87
MFG. ENGR. BW | APPROVED 9-17-87
USED ON 1260

NOVAMETRIX MEDICAL SYSTEMS, INC.
WALLINGFORD, CT U.S.A. 06492

SIZE	DRAWING NO.	CODE	REV.
B	5013	01	01

SCALE 1/1 SHEET 1 OF 1

This document contains information which is proprietary and the property of Novametrix Medical Systems Inc. and may not be reproduced, used or disclosed in whole or in part without the written consent of Novametrix Medical Systems, Inc.

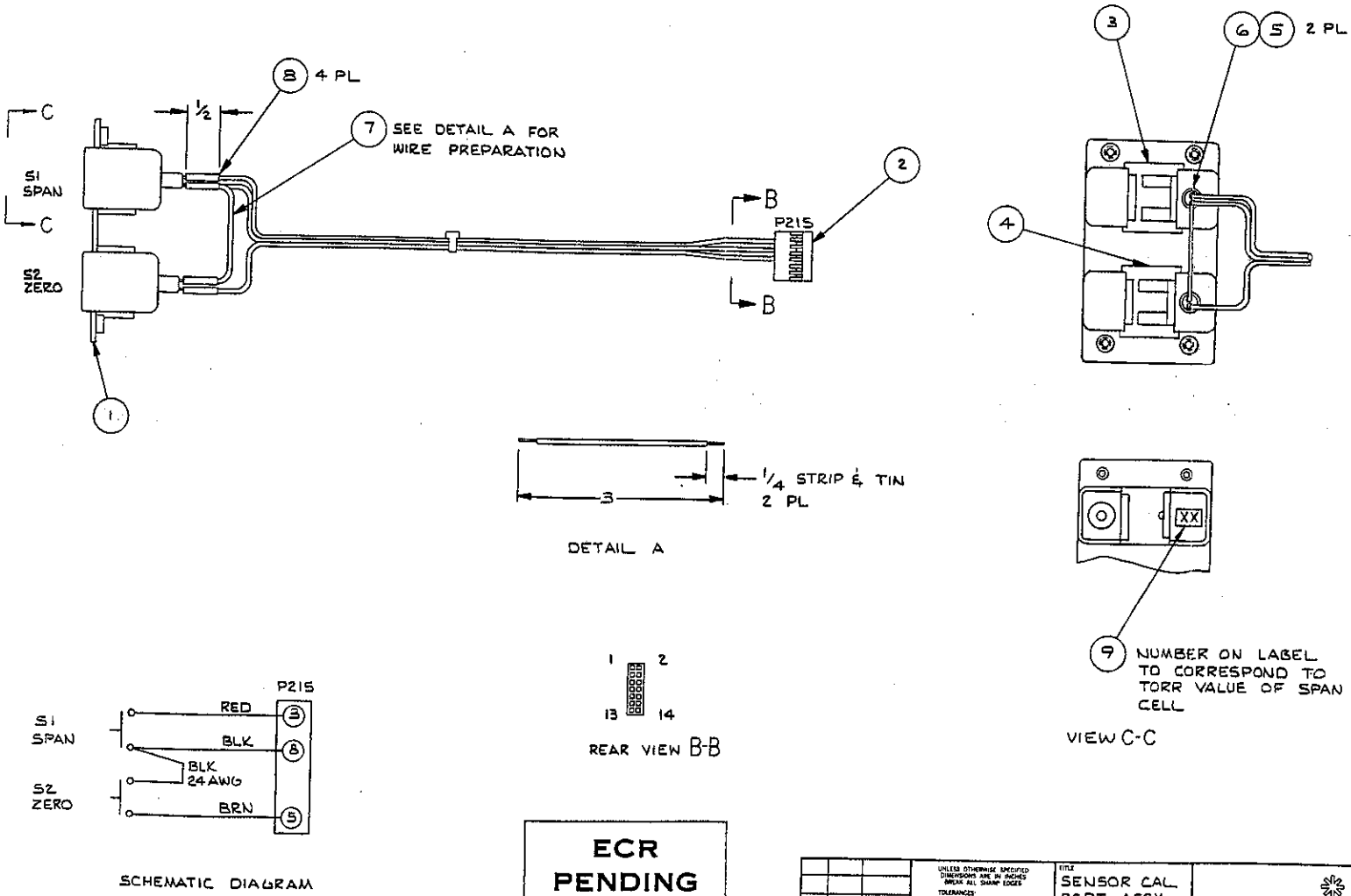

ECR PENDING

N716

REV	"K" NO	BY DATE
02	N137	GB 10 JUN 88
01	N123	GB 2-MAR-88

UNLESS OTHERWISE SPECIFIED DIMENSIONS ARE IN INCHES BREAK ALL SHARP EDGES

TOLERANCES: DEC ± — FRAC ± 1/32 HOLES ± .007-.003 ANG ± —

MATERIAL: —

FINISH: —

TITLE: SENSOR CAL RCPT ASSY, MODEL 1260

DRAWN: GDB 30 SEP 87 CHKD: MRL APPROVED: 11-5-87

SCALE: 1/1 USED ON: 04984-01

NOVAMETRIX MEDICAL SYSTEMS, INC.
WALLINGFORD, CT U.S.A. 06492

PART NUMBER

SIZE	DRAWING NO	CODE	REV
C	4959	01	02

This document contains information which is proprietary and the property of Novametrix Medical Systems Inc. and may not be reproduced, used or disclosed in whole or in part without the written consent of Novametrix Medical Systems Inc.

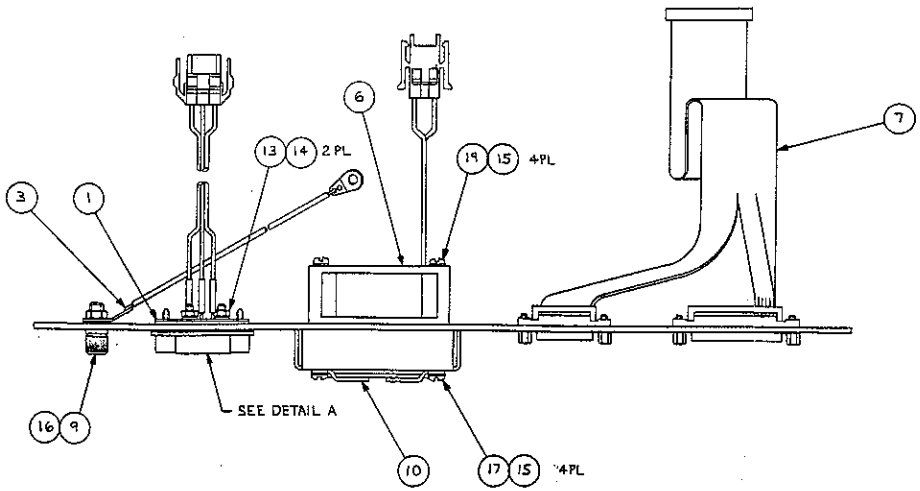

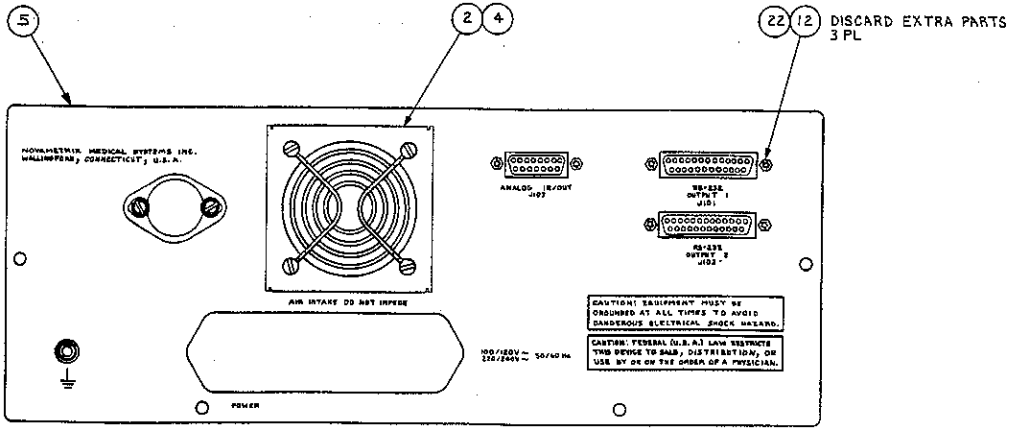

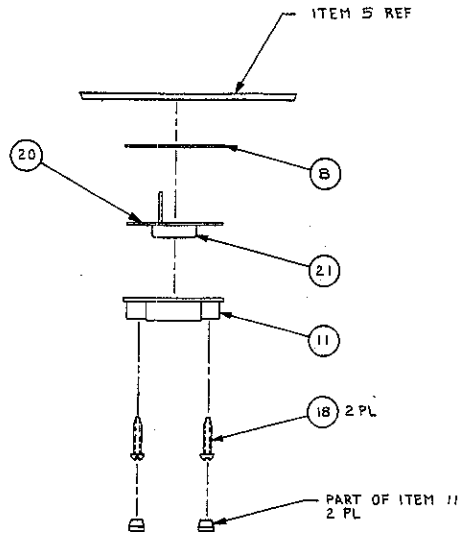

DETAIL A

ECR PENDING
N722

02	N137	GS 10-4-88				
01	N123	GS 7-14-88				
00	N104	JC 1-20-87				
REV	ECN	BY DATE				

DO NOT SCALE
UNLESS DIMENSIONAL SPECIFICS DIFFERENCES ARE IN DECIMAL/FRACTIONAL
BREAK ALL SHARP EDGES
TOLERANCES:
DEC. ± .005 FRAC. ± 1/64
HOLES: ± .005/.008 ANG. ± 1°
MATERIAL ~
FINISH ~

TITLE REAR PANEL ASSEMBLY, MODEL 1260

DRAWN JM 9 DEC 87
CHECKED M.R. LINDEMAN 9 DEC 87
MFG. ENGR.
APPROVED R.S. 5-9-88
WORKSHOP D 4R 83-01

NOVAMETRIX MEDICAL SYSTEMS INC.
WALLINGFORD, CT. U.S.A. 06492

SIZE	DRAWING NO.	CODE	REV.
D	5055	01	02

SCALE 1/1 SHEET 1 OF 1

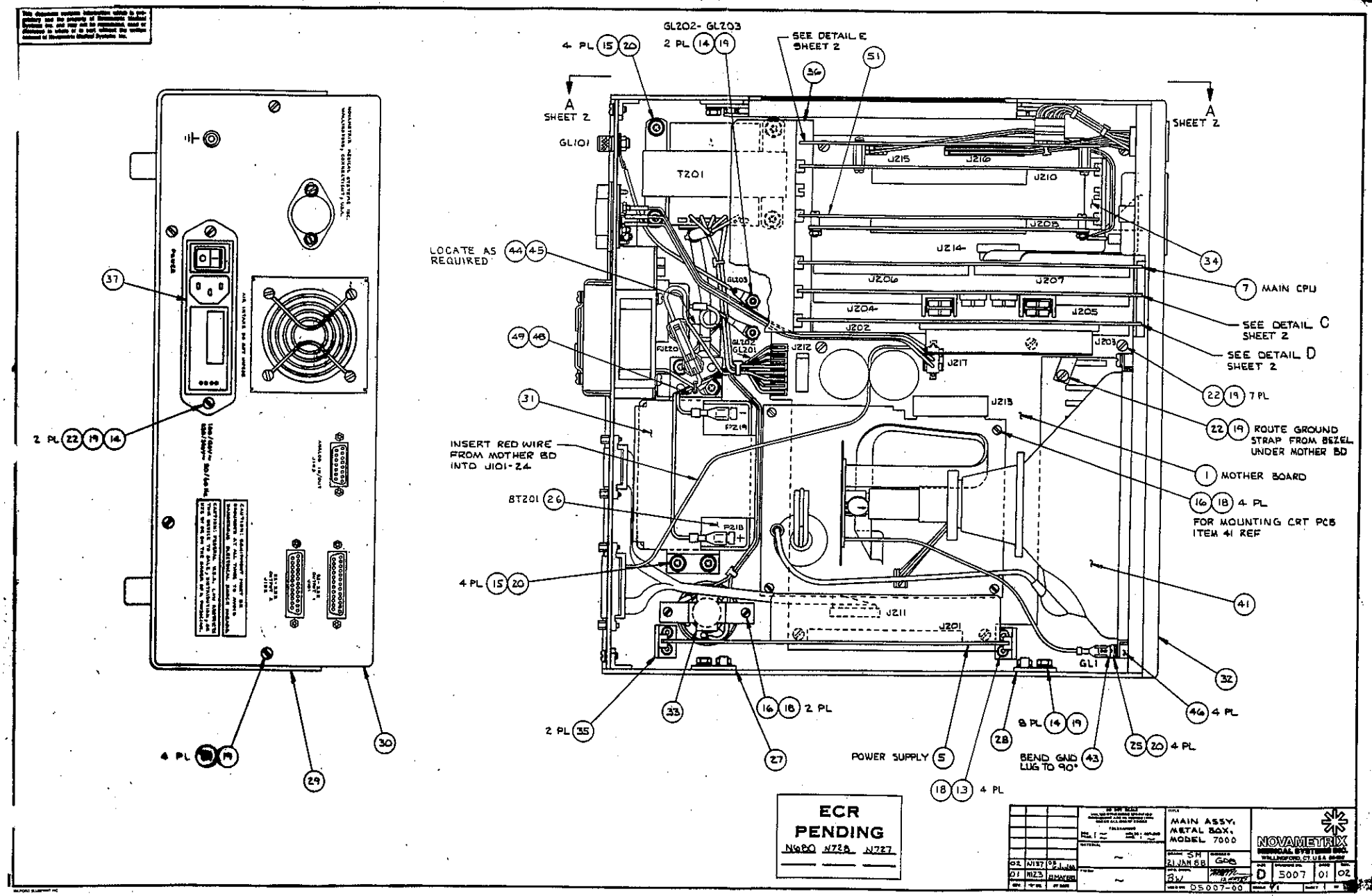

GL202- GL203
2 PL 14 19
4 PL 15 20
SEE DETAIL E SHEET 2
36
51
A SHEET 2
A SHEET 2
GL101
T201
J215
J216
J210
J208
J214
34
7 MAIN CPU
LOCATE AS REQUIRED 44 45
GL203
J206
J207
J204
J205
J202
SEE DETAIL C SHEET 2
SEE DETAIL D SHEET 2
49 48
FJ220
GL202
GL201
J212
J217
J203
22 19 7 PL
31
J213
22 19 ROUTE GROUND STRAP FROM BEZEL UNDER MOTHER BD
INSERT RED WIRE FROM MOTHER BD INTO J101-24
1 MOTHER BOARD
BT201 26
16 18 4 PL
FOR MOUNTING CRT PCB ITEM 41 REF
4 PL 15 20
41
J211
J201
GL1
32
46 4 PL
2 PL 35
33
16 18 2 PL
27
POWER SUPPLY 5
28
8 PL 14 19
BEND GND LUG TO 90° 43
25 20 4 PL
18 13 4 PL
37
2 PL 22 19 14
4 PL 19
29
30
ECR PENDING
N680 N728 N727
MAIN ASSY, METAL BOX, MODEL 7000
NOVAMETRIX
D 5007 01 02
D5007-00

This document contains information which is proprietary and the property of Novametrix Medical Systems Inc. and may not be reproduced, used or disclosed in whole or in part without the written consent of Novametrix Medical Systems Inc.

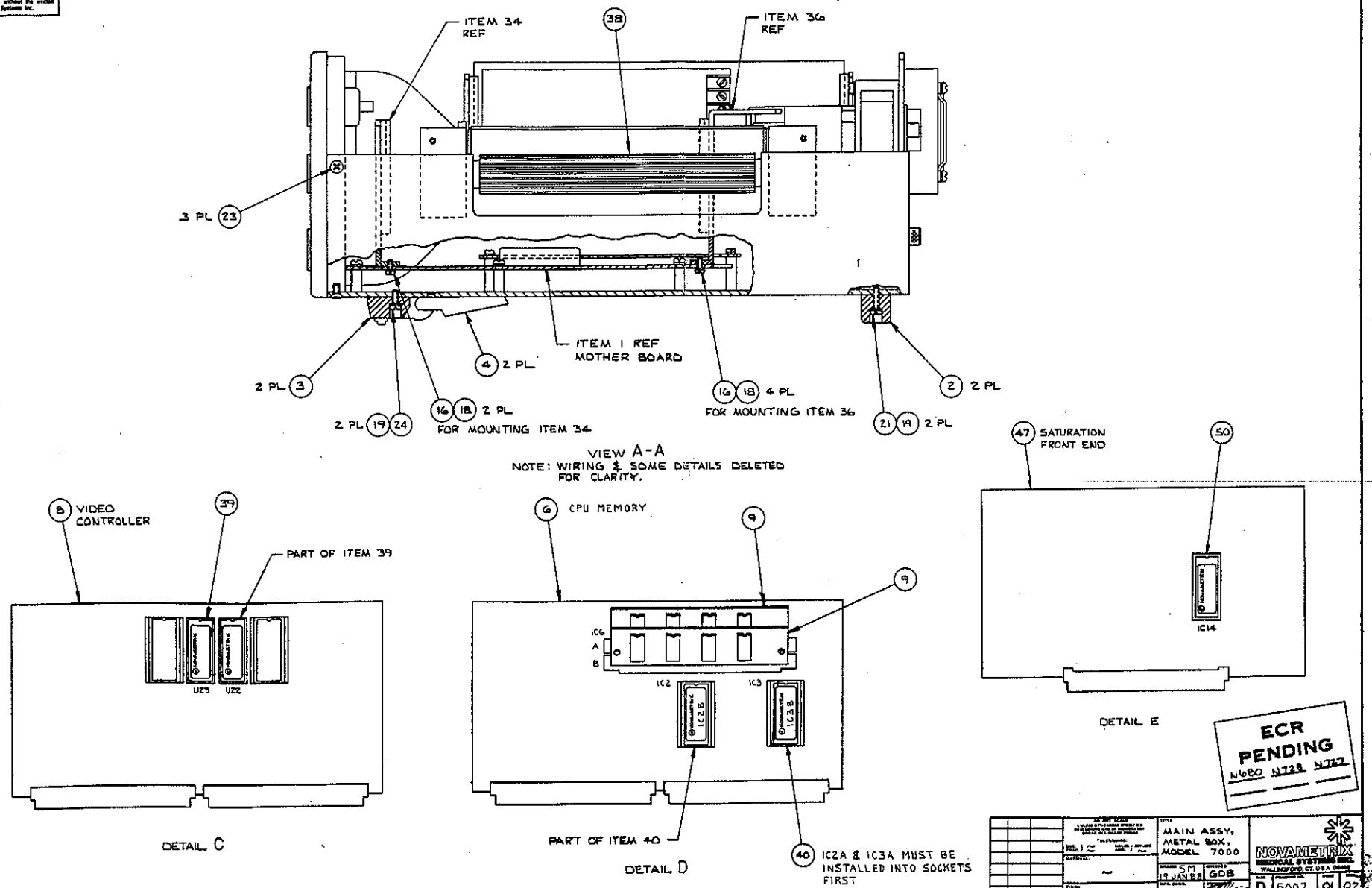

This document contains information which is proprietary and the property of Novametrix Medical Systems Inc. and may not be reproduced, used or disclosed in whole or in part without the written consent of Novametrix Medical Systems Inc.

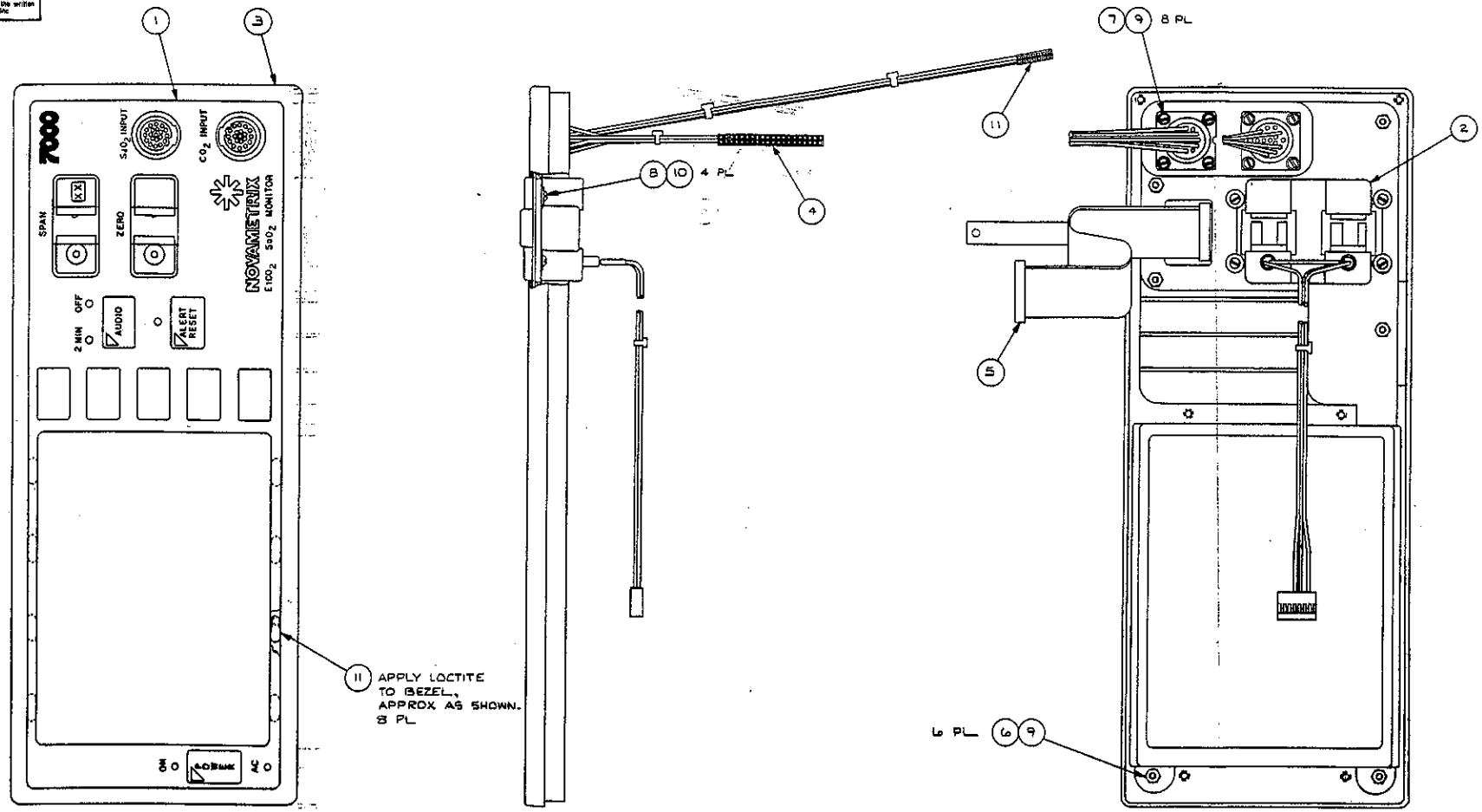

02	N137				
01	N123				

NO DIFF SCALE

TOLERANCES

MATERIAL: —

FINISH: —

TITLE: BEZEL ASSY, MODEL, 7000

DRAWN: SH 12 JAN 88

CHECKED: GOB

DWG. SIZE: BW

DWG. NO. DS007-01

NOVAMETRIX MEDICAL SYSTEMS INC. WALLINGFORD, CT. USA 06492

SIZE	DRAWING NO.	REV	SHEET
D	5088	01	02
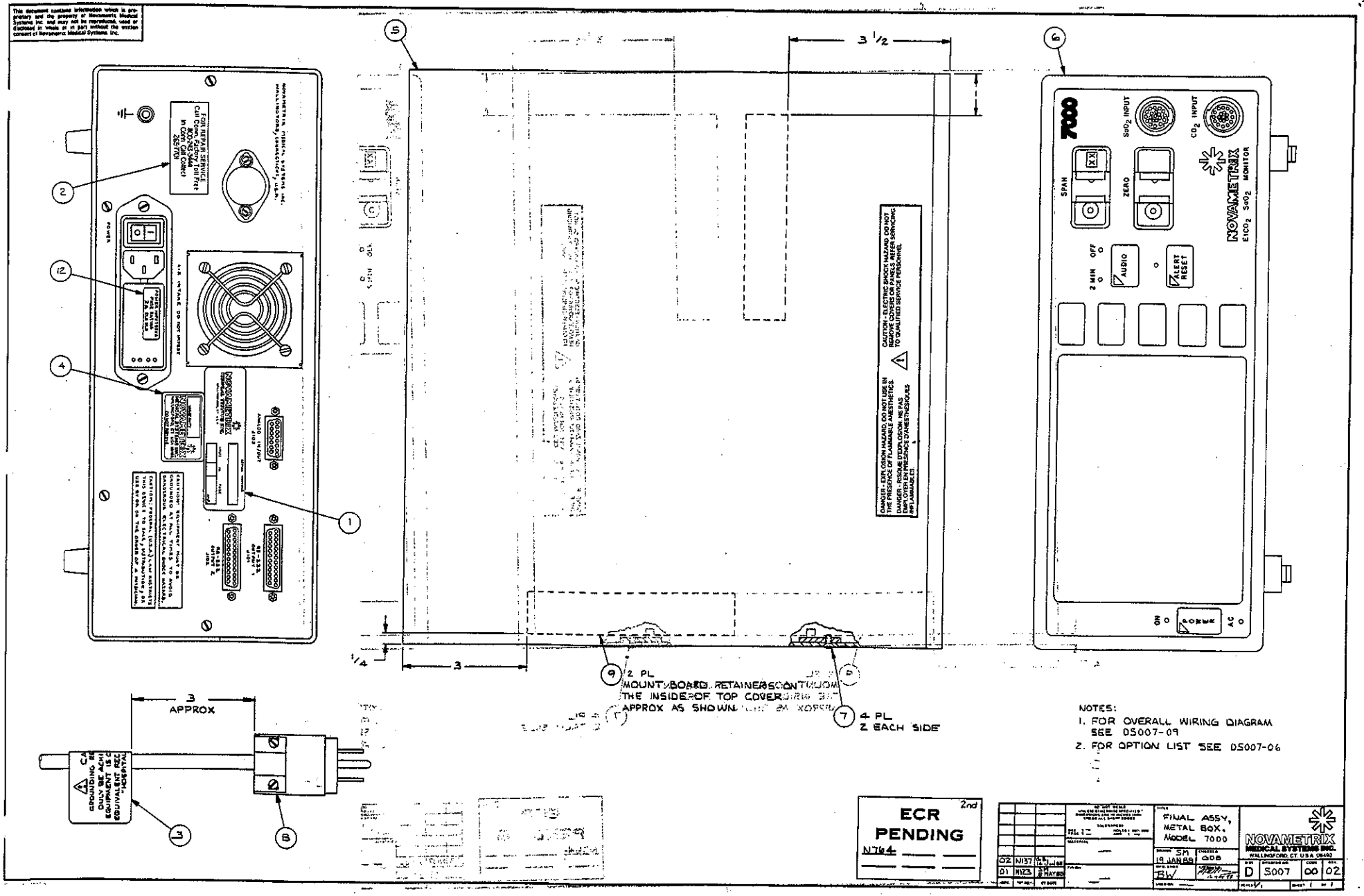
This document contains information which is proprietary and the property of Novametrix Medical Systems Inc. and may not be reproduced, used or disclosed in whole or in part without the written consent of Novametrix Medical Systems Inc.